ALLCONNE®

INDUCTOR & TRANSFORMER

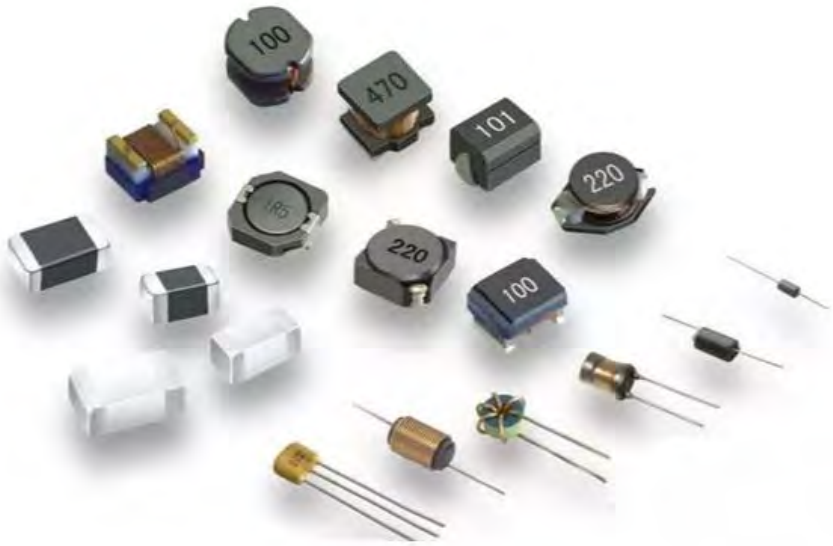

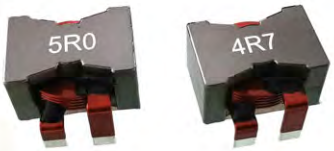

片式电感器
CHIP INDUCTOR

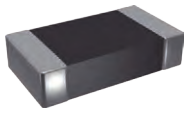

Series	PN	Size	Inductance (nH)	Tolerance	IDC(mA)	RDC(Ω)
CMP Ferrite Power Inductor 铁氧体功率电感器	CMP1608	1608	47~12000	±20%	60~150	0.12~1.25
	CMP2012	2012	47~22000		50~1100	0.10~0.75
	CMP2520	2520	1000~4700		1000~1500	0.12~0.26
	CMP3216	3216	47~27000		50~1200	0.15~1.00

片式电感器
CHIP INDUCTOR

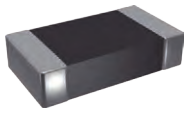

Series	PN	Size	Inductance (nH)	Tolerance	IDC(mA)	RDC(Ω)
CMH Ferrite Power Inductor 铁氧体功率电感器	CMH1608	1608	470~2200	±20%	750~1050	0.10~0.24
	CMH2012	2012	1000~4700		180~1150	0.11~0.30
	CMH2016	2016	470~4700		1100~1500	0.08~0.26
	CMH2520	2520	1000~5600		180~1600	0.06~0.22

片式电感器
CHIP INDUCTOR

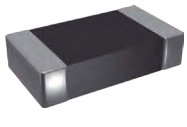

Series	PN	Size	Inductance (nH)	Tolerance	IDC(mA)	RDC(Ω)
VHF High Frequency 高频电感	VHF0402	0402	0.2~20	±0.1nH ±0.2nH ±0.3nH ±3% ±5%	0.12~0.32	0.4~4.5
	VHF0603	0603	0.6~120		50~1000	0.05~7.0
	VHF1005	1005	1.0~360		50~1000	0.06~7.0
	VHF1608	1608	1.0~470	±0.3nH ±5%	150~500	0.05~3.6
	VHF2012	2012	1.5~470		300~500	0.10~2.0
AHF Automotive Grade High Frequency 车规级高频电感器	AHF100505HQ	1005	1.0~360nH@ 100MHz	±0.1nH;±2% ±0.2nH;±3% ±0.3nH;±5%	50~400	0.10~7.5
	AHF160808H	1608	1.0~470nH@ 100MHz	±0.3nH ±5%	150~500	0.05~2.8
AMI Automotive Grade Ferrite Inductor 车规级铁氧体电感器	AMI160808	1608	47~3900	±10% ±20%	15~50	0.20~1.30
	AMI201209	2012	47~12000		15~300	0.15~1.15
	AMI321609	3216	47~12000		15~300	0.15~0.90

片式电感器
CHIP INDUCTOR

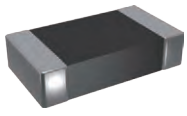

Series	PN	Size	Inductance (nH)	Tolerance	IDC(mA)	RDC(Ω)
CMI Ferrite Inductor 铁氧体电感器	CMI1005	1005	47~1800	±10%	18~25	0.45~1.80
	CMI1608	1608	47~22000		1~50	0.20~3.00
	CMI2012	2012	47~68000		5~300	0.15~2.60
	CMI3216	3216	47~100000		5~300	0.15~3.00
	CMI3225	3225	1000~120000		150~600	0.20~1.80
	CMI4532	4532	1000~120000		150~650	0.55~2.50

片式铁氧体磁珠
CHIP FERRITE BEADS

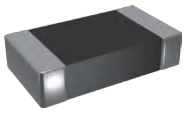

Series	PN	Size	Impedance(Ω) @ 100MHz	Tolerance	IDC(mA)	RDC(Ω)
CBY Ferrite Peak Beads 铁氧体尖峰磁珠	CBY1005	1005	1~1800	±25%	100~500	0.30~1.20
	CBY1608	1608	0~600		200~600	0.10~0.60
	CBY2012	2012	0~600		400~600	0.15~0.40
	CBY3216	3216	0~800		300~500	0.10~0.40

片式铁氧体磁珠
CHIP FERRITE BEADS

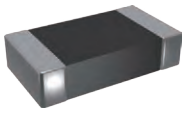

Series	PN	Size	Impedance(Ω) @ 100MHz	Tolerance	IDC(mA)	RDC(Ω)
CBH Ferrite High R Beads 铁氧体低频高阻磁珠	CBH1608	1608	80~1200	±25%	100~500	0.15~0.90
	CBH2012	2012	80~1200		100~400	0.15~0.60
	CBH3216	3216	26~800		200~1000	0.10~0.50

片式铁氧体磁珠
CHIP FERRITE BEADS

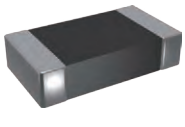

Series	PN	Size	Impedance(Ω) @ 100MHz	Tolerance	IDC(mA)	RDC(Ω)
CBW Large Current Beads 大电流磁珠	CBW0603	0603	10~1000	±25%	200~1000	0.05~1.25
	CBW1005	1005	0~1000		200~800	0.04~1.00
	CBW1608	1608	0~2500		400~1000	0.08~0.90
	CBW2012	2012	0~2500		100~3000	0.03~0.60
	CBW3216	3216	0~3000		200~4000	0.04~0.90
	CBW3225	3225	0~1000		2000~5000	0.05~0.30
	CBW4516	4516	19~600		1000~6000	0.015~0.30
	CBW4532	4532	30~600		1000~5000	0.06~0.25

片式铁氧体磁珠
CHIP FERRITE BEADS

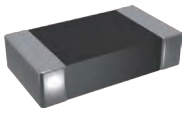

Series	PN	Size	Impedance(Ω) @ 100MHz	Tolerance	IDC(mA)	RDC(Ω)
CBG Beads 通用型磁珠	CBG0603	0603	10~1000	±25%	100~500	0.10~2.50
	CBG1005	1005	0~1200		100~500	0.10~1.30
	CBG1608	1608	0~2500		50~800	0.10~1.30
	CBG2012	2012	0~2700		30~900	0.08~1.40
	CBG3216	3216	0~3000		30~1000	0.10~1.50
	CBG3225	3225	10~1000		300~1000	0.10~0.40
	CBG4516	4516	19~800		200~1000	0.10~0.55
	CBG4532	4532	30~600		200~1000	0.15~0.40

片式铁氧体磁珠
CHIP FERRITE BEADS

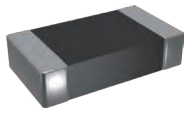

Series	PN	Size	Impedance(Ω) @ 100MHz	Tolerance	IDC(mA)	RDC(Ω)
CBM Ferrite Ultra-High Current Beads 铁氧体超大电流磁珠	CBM0603	0603	22~120	±25%	900~1000	0.04~0.16
	CBM1005	1005	0~1000		300~1800	0.05~0.65
	CBM1608	1608	0~1000		600~6000	0.02~0.40
	CBM2012	2012	0~1000		1500~6000	0.01~0.12
	CBM3216	3216	0~1000		2000~6000	0.01~0.12
	CBM4516	4516	0~80		3000~6000	0.01~0.025
	CBM4532	4532	0~220		6000	0.01~0.02

片式铁氧体磁珠
CHIP FERRITE BEADS

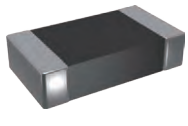

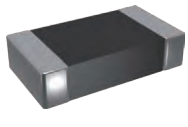

Series	PN	Size	Impedance(Ω) @ 100MHz	Tolerance	IDC(mA)	RDC(Ω)
ABW Automotive Grade Large Current Beads 车规级大电流型磁珠	ABW100505U	1005	0~1000	±25%	200~800	0.04~1.00
	ABW160808U	1608	7~1000		500~1000	0.08~0.55
	ABW201209U	2012	0~1500		300~3000	0.03~0.50
	ABW321609U	3216	0~1500		500~4000	0.04~0.45
ABM Automotive Grade Ultra-high Current Beads 车规级超大电流型磁珠	ABM100505U	1005	0~1000	±25%	300~1800	0.05~0.65
	ABM160808U	1608	7~1000		600~6000	0.02~0.40
	ABM201209U	2012	0~1000		1500~6000	0.01~0.12
	ABM321609U	3216	0~1000		2000~6000	0.01~0.12

片式铁氧体磁珠
CHIP FERRITE BEADS

Series	PN	Size	Impedance(Ω) @ 100MHz	Tolerance	IDC(mA)	RDC(Ω)
CBU Ferrite Ultra-High Current Beads 铁氧体 特大电流磁珠	CBU1608	1608	60~1000	±25%	1000~3500	0.025~0.30
	CBU2012	2012	80~1000		2000~3500	0.025~0.18

功率电感器
POWER INDUCTOR

Series	PN	Size	Inductance (nH)	Tolerance	IDC(mA)	RDC(Ω)
FHW Wire Wound Ceramic 陶瓷体绕 线电感器	FHW0402	0402	1.0~120	±2% ±5% ±10%	30~1360	0.045~2.20
	FHW0603	0603	1.6~470		75~700	0.04~7.00
	FHW0805	0805	2.2~2200		150~800	0.03~4.20
	FHW1008	1008	3.9~10000		160~1000	0.035~9.10
	FHW1210	1210	3.9~10000		200~1000	0.05~6.80

功率电感器
POWER INDUCTOR

Series	PN	Size	Common Mode Impedance @ 100MHz(Ω)	Tolerance	IDC(mA)	RDC(Ω)
Common Mode Filter 共模滤波器	CMC0805	0805	67~900	±25%	150~400	0.25~0.90
	CMC1206	1206	90~2200		200~370	0.3~1.20

功率电感器
POWER INDUCTOR

Series	PN	Size	Inductance (nH)	Tolerance	IDC(mA)	RDC(Ω)
FHW Wire Wound Ferrite 铁氧体绕 线电感器	FHW0402	0402	20~560	±5% ±10%	300~2200	0.28~0.90
	FHW0603	0603	47~4700		80~1000	0.1~4.00
	FHW0805	0805	120~22000		80~800	0.2~6.00
	FHW1008	1008	120~220000		20~800	0.15~18.00
	FHW1210	1210	120~560000		30~450	0.2~28.00
	FHW1812	1812	330~1000000		90~1000	0.13~16.50

功率电感器
POWER INDUCTOR

Series	PN	Size	Inductance (μH)	Tolerance	IDC(A)	RDC(Ω)
MRS Series Power Inductor (Shielded) 功率电感器 (屏蔽型)	MRS2010	2.1×1.7×1.0	0.24~10	±20% ±30%	0.65~3.00	0.040~0.826
	MRS2512	2.5×2.0×1.2	0.24~10		0.85~4.05	0.023~0.480

功率电感器
POWER INDUCTOR

Series	PN	Size	Inductance (μH)	Tolerance	IDC(A)	RDC(Ω)
PIO Series Power Inductor (Non-Shielded) 功率电感器 (开放型)	PIO43	4.5×4.0×3.2	1.0~220	±10% ±20% ±30%	0.27~3.50	0.045~2.460
	PIO54	5.8×5.2×4.5	1.0~1000		0.15~3.20	0.025~5.500
	PIO75	7.8×7.0×5.0	1.0~2200		0.15~5.80	0.015~8.300

功率电感器
POWER INDUCTOR

Series	PN	Size	Inductance (μH)	Tolerance	IDC(A)	RDC(Ω)
HA Series Power Inductor (Shielded) 功率电感器 (屏蔽型)	HA0420	4.9×4.4×2.0	0.22~10	±20%	1.50~9.00	0.008~0.230
	HA0520	5.9×5.3×2.2	1.00~10		1.98~7.00	0.020~0.190
	HA0530	5.9×5.3×3.2	0.68~22		1.08~9.00	0.012~0.250
	HA0630	7.6×7.0×3.2	0.33~47		1.00~21.00	0.004~0.390
	HA0650	7.6×7.0×5.2	1.00~100		1.20~12.00	0.0075~0.440
	HA1040	11.5×10.5×4.2	0.22~100		0.90~29.50	0.002~0.300
	HA1050	11.5×10.5×5.2	0.82~47		3.00~16.00	0.0035~0.145
	HA1250	14.5×13.5×5.2	0.33~68		1.50~32.00	0.0015~0.210
	HA1265	14.5×13.5×6.5	1.00~150		1.60~25.00	0.003~0.280

功率电感器
POWER INDUCTOR

Series	PN	Size	Inductance (μH)	Tolerance	IDC(A)	RDC(Ω)
PRS Series Power Inductor (Shielded) 功率电感器 (屏蔽型)	PRS2512	2.5×2.1×1.25	0.33~10	±20% ±30%	0.62-3.35	0.049~0.690
	PRS3015	3.0×3.0×1.5	1.00~47		0.35~2.35	0.036~1.608
	PRS4018	4.0×4.0×1.8	1.00~100		0.25~2.00	0.036~1.950
	PRS4020	4.0×4.0×2.0	1.00~100		0.31~2.15	0.0377~2.015
	PRS5020	5.0×5.0×2.0	1.00~100		0.53~3.80	0.026~1.430
	PRS5040	5.0×5.0×4.0	1.00~1000		0.19~4.90	0.0156~8.450
	PRS6020	6.0×6.0×2.0	1.00~100		0.45~3.50	0.026~1.560
	PRS6028	6.0×6.0×2.8	1.00~680		0.23~5.20	0.0182~5.980
	PRS6045	6.0×6.0×4.5	0.82~1000		0.20~5.90	0.0104~5.850
	PRS8040	8.0×8.0×4.0	6.80~1500		0.26~3.70	0.0325~5.590
ARS Automotive Grade(Shielded) 车规级(屏蔽)	ARS4018	4.0×4.0×1.8	1.00~100	±20% ±30%	0.25~2.00	0.036~1.95
	ARS6045	6.0×6.0×4.5	1.00~100		0.80~5.14	0.0182~0.650

功率电感器
POWER INDUCTOR

Series	PN	Size	Inductance (μH)	Tolerance	IDC(A)	RDC(Ω)
MS Series Power Inductor (Shielded) 功率电感器 (屏蔽型)	MS73	7.3×7.3×3.2	1.0~1000	±20% ±30%	0.16~3.60	0.025~9.440
	MS74	7.3×7.3×4.2	1.0~1000		0.18~6.00	0.022~6.000
	MS124	12.2×12.2×4.5	1.0~470		0.40~12.0	0.008~1.300
	MS125	12.2×12.2×5.7	1.3~10000		0.12~8.00	0.012~20.000
	MS127	12.2×12.2×7.5	1.0~2200		0.30~9.80	0.007~2.950
	MS103R	10.2×10.0×3.1	1.5~220		0.75~7.00	0.018~1.760
	MS104R	10.2×10.0×4.0	1.0~1000		0.32~10.0	0.014~5.110
	MS105R	10.2×10.0×5.1	1.5~4700		0.20~10.5	0.011~7.500

立式固定电感器
VERTICAL FIXED INDUCTOR

Series	PN	Size	Inductance (μH)	Tolerance	IDC(mA)	RDC(Ω)
VLU Vertical Fixed UL套管 立式电感器	VLU0406	5.5×8.5	1~1000	±5% ±10% ±20%	150~3000	0.025~9.00
	VLU0507	6.5×8.5	1~2000		180~2000	0.03~10.00
	VLU0608	8.0×11.0	1~10000		40~4000	0.015~40.00
	VLU0810	10.0×12.5	1~10000		100~8500	0.013~19.00
	VLU0912	10.5×14.5	1~15000		100~5200	0.015~17.50
	VLU1010	12.0×12.5	1~6800		200~6100	0.0165~9.80
	VLU1012	12.0×14.5	1~2200		350~5500	0.02~3.50
	VLU1215	14.5×16.5	10~2200		700~9800	0.025~2.50
	VLU1415	16.5×17.0	22~330		1000~8000	0.130~5.20

立式固定电感器
VERTICAL FIXED INDUCTOR

Series	PN	Size	Inductance (μH)	Tolerance	IDC(mA)	RDC(Ω)
VLP Shielded I-shaped 磁屏蔽 立式电感器	VLP1009	10.5×10.0	10~500	±10% ±15% ±20%	450~3000	0.036~1.20
	VLP1012	11.0×13.5	10~500		450~3000	0.036~1.20
	VLP1014	11.0×15.0	10~500		450~3000	0.036~1.20
	VLP1212	13.0×13.5	10~500		450~3000	0.036~1.20

立式固定电感器
VERTICAL FIXED INDUCTOR

Series	PN	Size	Inductance (μH)	Tolerance	IDC(mA)	RDC(Ω)
LGA Color Code Inductor 色码电感器	LGA0204	2.3×4.2	0.22~220	±10% ±15% ±20%	35~400	0.4~20.0
	LGA0307	2.8×7.0	0.22~1000		40~400	0.4~33.0
	LGA0410	4.0×10.5	0.22~4700		55~1400	0.1~74.0
	LGA0510	5.0×10.5	47~10000		25~340	1.22~105.0

穿芯电感器(磁珠)
BEAD CORE INDUCTOR

Series	PN	Size	Impedance(Ω) @25MHz	Impedance(Ω) @100MHz
RH Type Bead Core Inductor RH型穿芯电感器(穿线磁珠)	RH3.5×0.8×4.7	3.5×0.8×4.7	30	50
	RH3.5×0.8×6.0	3.5×0.8×6.0	40	70
	RH3.5×0.8×9.0	3.5×0.8×9.0	60	100
	RH3.5×1.0×12.0	3.5×1.0×12.0	80	120

磁环电感器
TOROIDAL COILS

Series	PN	Size	Inductance (μH)	Tolerance	IDC(mA)	RDC(Ω)
Toroidal Coils 磁环电感器	TC04~38	04~38	1.0~10000	±20% ±30%	100~10000	<10

磁棒电感器
MAGNETIC ROD COIL

Series	PN	Size	Inductance (μH)	Tolerance	IDC(mA)	RDC(Ω)
Magnetic Rod Coil 磁棒电感器	DL2510	4.5×10	1.0~3.3	±10% ±20% ±30%	1000~2500	<0.03
	DL0306	5.5×6	1.0~7.0		1000~3500	<0.04
	DL0308	5.5×8				
	DL0310	5.5×10				
	DL0312	5.5×12				
	DL0315	5.5×15				
	DL0317	5.5×17				
	DL0322	5.5×22				
	DL0415	6.5×15	0.5~6.5		1000~4000	<0.05
	DL0420	6.5×20				
	DL0425	6.5×25				
	DL0512	7.5×12	1.0~11.0		1000~4500	<0.06
	DL0520	7.5×20				
	DL0525	7.5×25				
	DL0620	8.5×20	1.0~15.0		1000~5000	<0.07
	DL0625	8.5×25				

ACLS SERIES

Product description:

- High current and Low DCR.
- Low profile for machine placement.
- Minimize electromagnetic interference.
- Prevent EMI effect via precise impedance.
- Custom design available.

Explanation of part numbers:

ACLS	0807	MN	-	1R5	M
Series Codes	Size Codes	Material type		Inductance Codes	Tolerance

Boundary dimension:

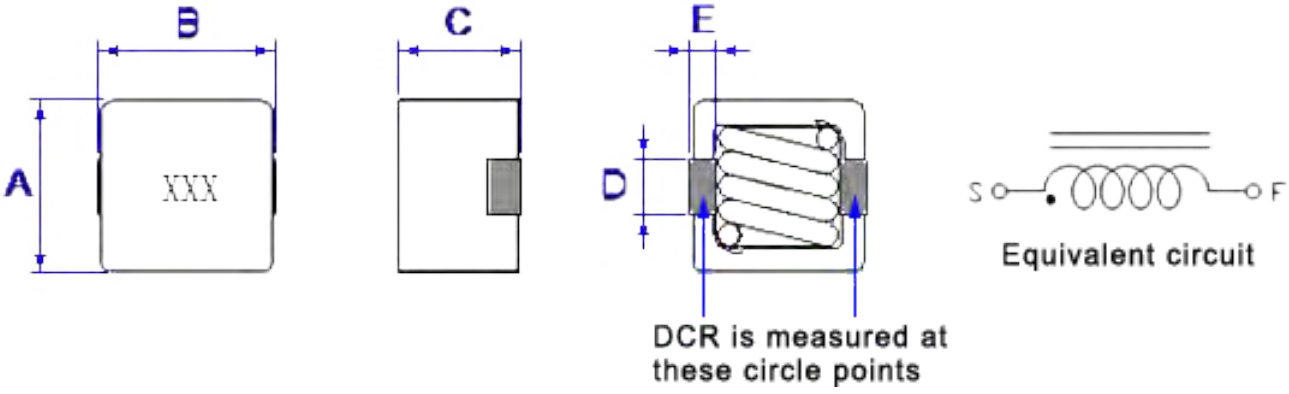

(unit: mm)

Size / Series	A	B	C	D	E	Packing (Pcs/Reel)
ACLS0807	7.9±0.4	8.4±0.4	7.2±0.4	2.3±0.2	1.5±0.2	500
ACLS1009	10.0±0.4	10.9±0.4	9.3±0.4	3.0±0.2	1.6±0.2	400
ACLS1210	11.4±0.4	12.1±0.4	9.5±0.5	3.5±0.2	2.0±0.2	300

Electrical characteristics:

Test condition:at 25℃ 100KHz/0.1V

PART NO.	L(0A) (μH±20%)	Irms(A) Typ.	Isat(A) Typ.	DCR(mΩ) Typ.	DCR(mΩ) Max	Wurth
ACLS0807MN-R30M	0.3	20.5	36	2.3	2.7	7443340030
ACLS0807MN-R47M	0.47	19	32	2.65	3.1	7443340047
ACLS0807MN-R56M	0.56	19	28	2.65	3.1	- -
ACLS0807MN-R68M	0.68	19	23.5	2.65	3.1	7443340068
ACLS0807MN-R82M	0.82	17	23	3.6	3.9	- -
ACLS0807MN-1R0M	1	17	24	3.6	3.9	7443340100
ACLS0807MN-1R5M	1.5	16.5	18.5	5.3	5.6	7443340150
ACLS0807MN-2R2M	2.2	16.5	12.5	5.3	5.6	7443340220
ACLS0807MN-3R3M	3.3	14	8.5	7.5	8.2	7443340330
ACLS0807MN-4R7M	4.7	7.5	8	12.7	13.5	7443340470
ACLS0807MN-6R8M	6.8	5.5	7.5	23.3	24	7443340680
ACLS0807MN-100M	10	4.4	7	38.5	41	7443341000
ACLS1009MN-R22M	0.22	21.5	60	1.4	1.6	7443330022
ACLS1009MN-R33M	0.33	21.5	55	1.4	1.6	7443330033
ACLS1009MN-R47M	0.47	20.5	47	1.6	1.85	7443330047
ACLS1009MN-R68M	0.68	20	38	2.15	2.65	7443330068
ACLS1009MN-R82M	0.82	20	36	2.15	2.65	7443330082
ACLS1009MN-1R0M	1	20	27.5	2.15	2.65	7443330100
ACLS1009MN-1R5M	1.5	18	27	3.35	4	7443330150
ACLS1009MN-2R2M	2.2	16.5	22	4.6	4.8	7443330220
ACLS1009MN-3R3M	3.3	14	15.5	6.5	7.15	7443330330
ACLS1009MN-4R7M	4.7	13	15	9.4	9.9	7443330470
ACLS1009MN-6R8M	6.8	11.5	11	14.15	15	7443330680
ACLS1009MN-8R2M	8.2	11.5	8	14.15	15	7443330820
ACLS1009MN-100M	10	9	8	22.75	23.1	7443331000
ACLS1210MN-R22M	0.22	27	60	1.1	1.5	7443320022
ACLS1210MN-R33M	0.33	27	55	1.1	1.5	7443320033
ACLS1210MN-R47M	0.47	26	48	1.35	1.85	7443320047
ACLS1210MN-R68M	0.68	26	38	1.35	1.85	7443320068
ACLS1210MN-R82M	0.82	24	36	1.85	2.5	7443320082
ACLS1210MN-1R0M	1	24	32	1.85	2.5	7443320100
ACLS1210MN-1R5M	1.5	19.5	27	2.95	3.5	7443320150
ACLS1210MN-2R2M	2.2	18	23	3.9	4.3	7443320220
ACLS1210MN-3R3M	3.3	17	17	5.2	5.7	7443320330
ACLS1210MN-4R7M	4.7	15.5	15.5	7.25	7.9	7443320470
ACLS1210MN-6R8M	6.8	13	13	10.15	11	7443320680
ACLS1210MN-8R2M	8.2	13	12	10.6	11.8	7443320820
ACLS1210MN-100M	10	9	10	15.35	16.7	7443321000

Packing Information:

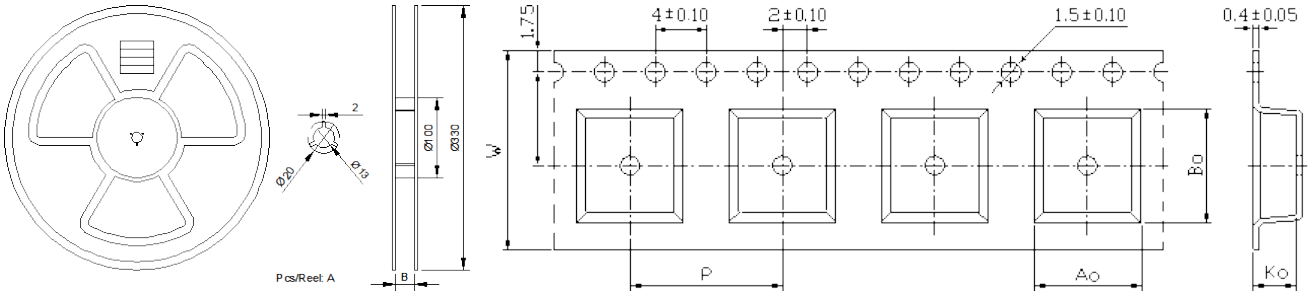

Series	A(Pcs/Reel)	B	W	P	Ao	Bo	Ko
ACLS0807	500	24.5±0.5	24	16	8.0±0.1	9.0±0.1	7.0±0.15
ACLS1009	400	24.5±0.5	24	16	10.4±0.2	11.3±0.2	10.0TYP
ACLS1210	300	24.5±0.5	24	20	11.8±0.1	12.5±0.1	10.5TYP

Typical Pulling Force: 10-130 grams:

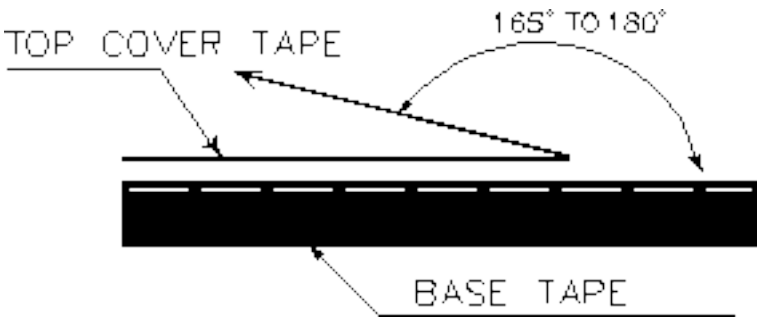

AP0595 SERIES

Features

- Ultra low cost.
- High frequency range up to 1.0 MHz.
- Very low DC resistance.
- Easy customized.
- All lead-free. (RoHS).

Applications

- Motherboards for laptop and desktop computers.
- DC/DC converter in distributed power systems or VRM applications.
- Inductor for general purpose use.

Part numbering system

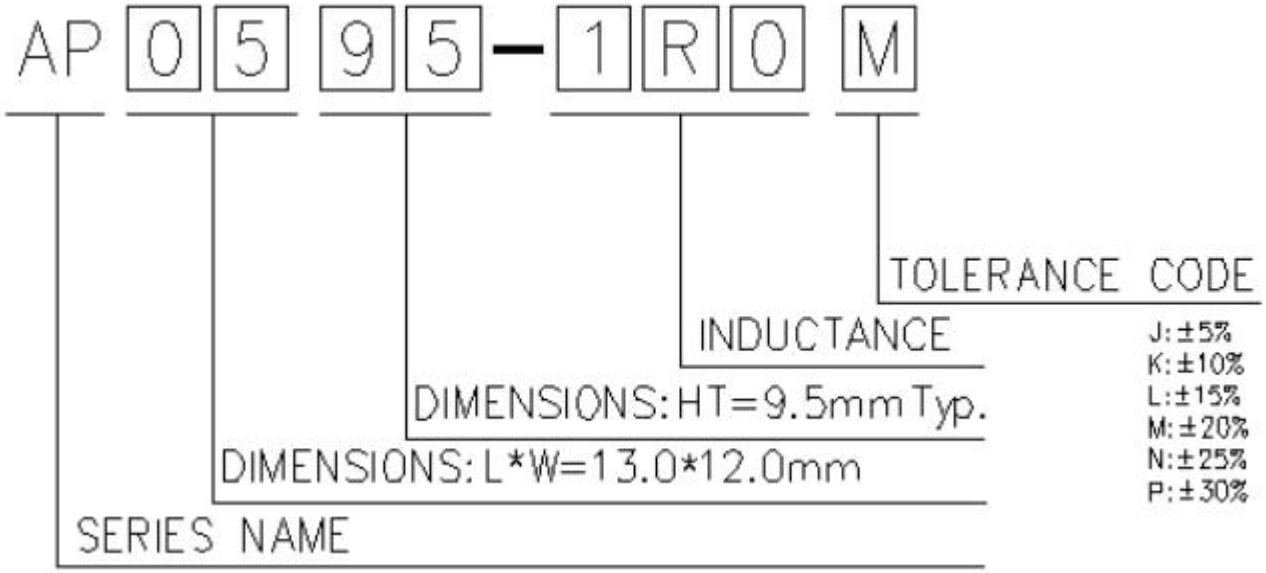

Packing information:

Series Name	Qty. per inner box (mm)		Outer Box (mm)	
AP0595	1000Pcs	238*156*160	2000Pcs	328*251*170

AP0595 SERIES

Mechanical dimension: Unit: mm

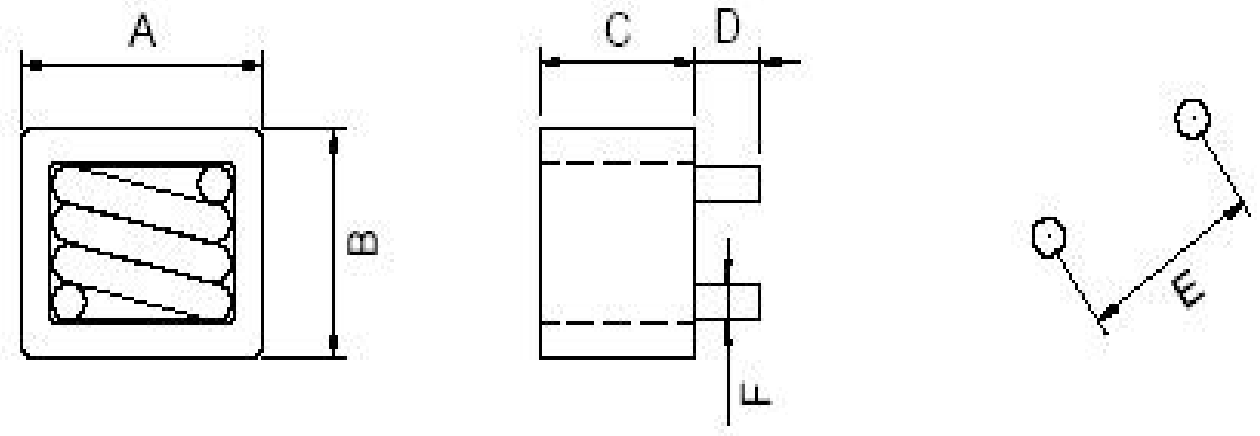

PART No.	A	B	C	D	E	F
AP0595-R47M	13.5MAX	12.5MAX	10.0MAX	3.5±0.5	10.0±1	1.7±0.1
AP0595-R60M	13.5MAX	12.5MAX	10.0MAX	3.5±0.5	10.0±1	1.7±0.1
AP0595-R80M	13.5MAX	12.5MAX	10.0MAX	3.5±0.5	10.0±1	1.7±0.1
AP0595-1R0M	13.5MAX	12.5MAX	10.0MAX	3.5±0.5	10.2±1	1.5±0.1

Electrical Characteristics:

PART No.	L(0A) (uH±20%)	DCR (mΩ) MAX	L(rms) (uH±20%)	Irms (Amperes)	Isat (Amperes)	PIN TO PIN
AP0595-R47M	0.47	0.85(Typ. 0.75)	0.45	40	54	
AP0595-R60M	0.60	0.85(Typ. 0.75)	0.55	38	50	
AP0595-R80M	0.80	0.85(Typ. 0.75)	0.68	36	40	
AP0595-1R0M	1.00	1.30(Typ. 1.15)	0.94	34	38	

NOTE:

1. All test data is referenced to 25℃ ambient, test condition 100KHz, 1.0V.
2. Irms: DC current(A) that will cause an approximate △T of 40℃.
3. Isat: DC current(A) that will cause Lo to drop approximate 20%.
4. Operating temperature range is -40℃ to 120℃.
5. The part temperature(ambient and temp rise) should not exceed 125℃ under worse case operating conditions. Circuit design, component placement, PWB trace size and thickness, airflow and other cooling provision all affect the part temperature. Part temperature should be verified in the end application.

APT0480 SERIES

Features

- Ultra low cost.
- Shielded construction.
- High frequency range up to 1.0 MHz.
- Very low DC resistance.
- Easy customized.
- All lead-free. (RoHS).

Applications

- Motherboards for laptop and desktop computers.
- DC/DC converter in distributed power systems or VRM applications.
- Inductor for general purpose use.

Part numbering system

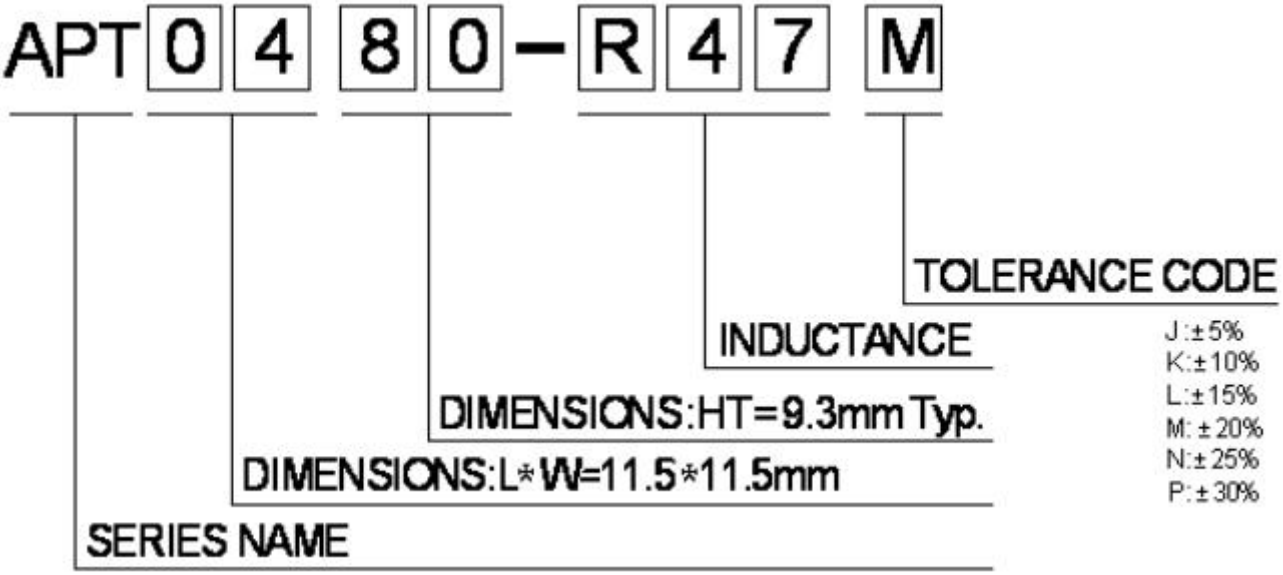

Packing information:

Series Name	Qty. per inner box (mm)		Outer Box (mm)	
APT0480	1000Pcs	238*156*160	2000Pcs	328*251*170

APT0480 SERIES

Mechanical dimension: Unit: mm

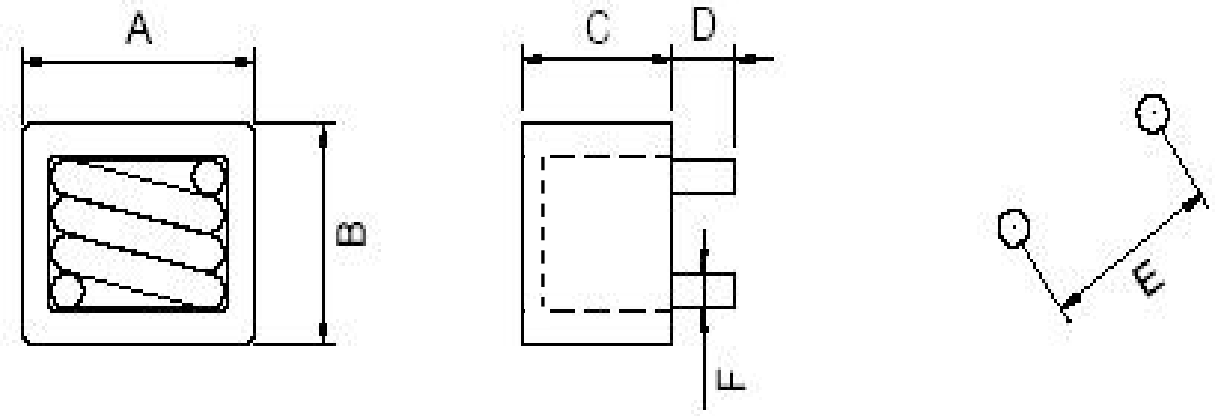

PART No.	A	B	C	D	E	F
APT0480-R47M	11.7MAX	11.7MAX	9.7MAX	3.5±0.5	8.7±1	1.5±0.1
APT0480-R60M	11.7MAX	11.7MAX	9.7MAX	3.5±0.5	8.7±1	1.5±0.1
APT0480-R80M	11.7MAX	11.7MAX	9.7MAX	3.5±0.5	8.4±1	1.3±0.1
APT0480-1R0M	11.7MAX	11.7MAX	9.7MAX	3.5±0.5	8.4±1	1.3±0.1

Electrical Characteristics:

PART No.	L(0A) （uH±20%）	DCR （mΩ） MAX	L(rms) （uH±20%）	Irms （Amperes）	Isat （Amperes）	PIN TO PIN
APT0480-R47M	0.47	0.90	0.41	34	50	
APT0480-R60M	0.60	0.90	0.56	33	50	
APT0480-R80M	0.80	1.50	0.73	32	45	
APT0480-1R0M	1.00	1.50	0.92	30	45	

NOTE:

1. All test data is referenced to 25℃ ambient, test condition 100KHz, 1.0V.
2. Irms: DC current(A) that will cause an approximate △T of 40℃.
3. Isat: DC current(A) that will cause Lo to drop approximate 20%.
4. Operating temperature range is -40℃ to 120℃.
5. The part temperature(ambient and temp rise) should not exceed 125℃ under worse case operating conditions. Circuit design, component placement, PWB trace size and thickness, airflow and other cooling provision all affect the part temperature. Part temperature should be verified in the end application.

APT3155 SERIES

Features

- Ultra low cost.
- Shielded construction.
- High frequency range up to 1.0 MHz.
- Very low DC resistance.
- Easy mounting.
- All lead-free. (RoHS).

Applications

- Motherboards for laptop and desktop computers.
- DC/DC converter in distributed power systems or VRM applications.
- Inductor for general purpose use.

Part numbering system

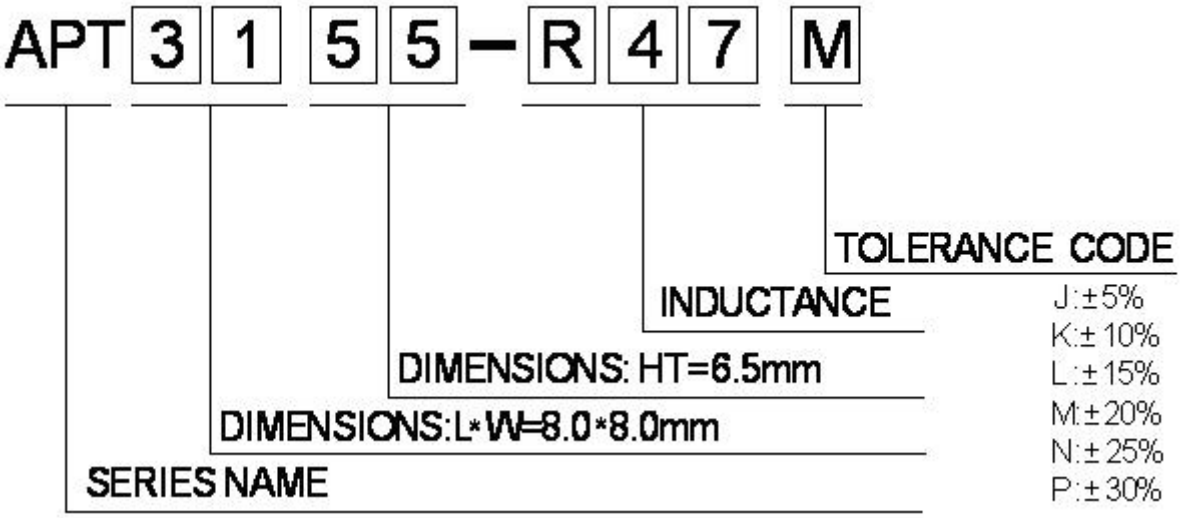

Packing information:

Series Name	Qty. per inner box (mm)		Outer Box (mm)	
APT3155	2000Pcs	238*156*160	4000Pcs	328*251*170

APT3155 SERIES

Mechanical dimension: Unit: mm

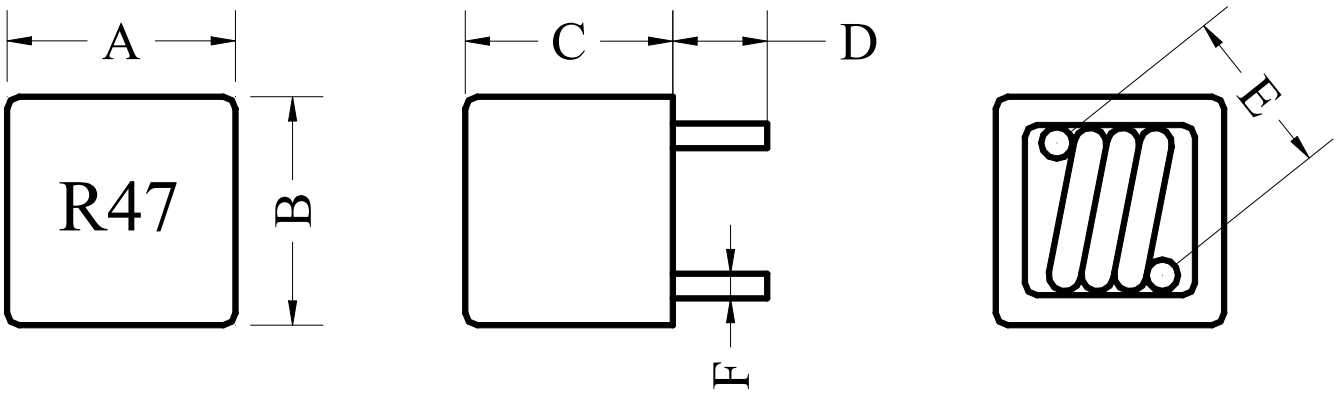

PART No.	A	B	C	D	E	F
APT3155-R47M	8.2MAX	8.2MAX	6.8MAX	3.5±0.5	5.5±1	0.9
APT3155-R60M	8.2MAX	8.2MAX	6.8MAX	3.5±0.5	5.5±1	0.9
APT3155-R80M	8.2MAX	8.2MAX	6.8MAX	3.5±0.5	6.5±1	0.8
APT3155-1R0M	8.2MAX	8.2MAX	6.8MAX	3.5±0.5	6.5±1	0.7

Electrical Characteristics:

PART No.	L(0A) (uH±20%)	DCR (mΩ) Max	L(rms) (uH±20%)	Irms (Amperes)	Isat (Amperes)	PIN TO PIN
APT3155-R47M	0.47	3.5	0.42	21	35	
APT3155-R60M	0.60	3.5	0.54	20	30	
APT3155-R80M	0.80	4.0	0.70	18	24	
APT3155-1R0M	1.00	6.0	0.90	16	22	

NOTE:
1. All test data is referenced to 25℃ ambient, test condition 100KHz, 1.0V.
2. Irms: DC current(A) that will cause an approximate △T of 40℃.
3. Isat: DC current(A) that will cause Lo to drop approximate 20%.
4. Operating temperature range is -40℃ to 120℃.
5. The part temperature(ambient and temp rise) should not exceed 125℃ under worse case operating conditions. Circuit design, component placement, PWB trace size and thickness, airflow and other cooling provision all affect the part temperature. Part temperature should be verified in the end application.

LFET SERIES

Characteristics:

- Stable stray inductance for differential mode filtering.
- High current carrying capacity.
- Low profile.
- Flammability corresponding to UL 94 V-0.
- Climatic category 40/115/21.

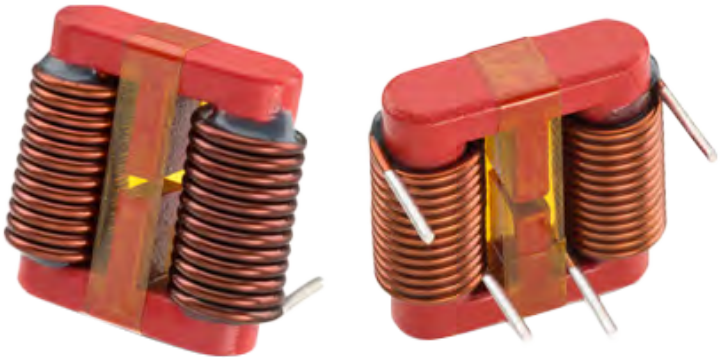

Applications:

- AC/DC converter.
- High frequency DC/DC converter.
- Mains operated LED drivers.
- Switched mode power supplies.

Explanation of part numbers:

LFET	2725	W	-	451	P
Series Codes	Size Codes	Material type		Inductance Codes	Tolerance

Boundary dimension:

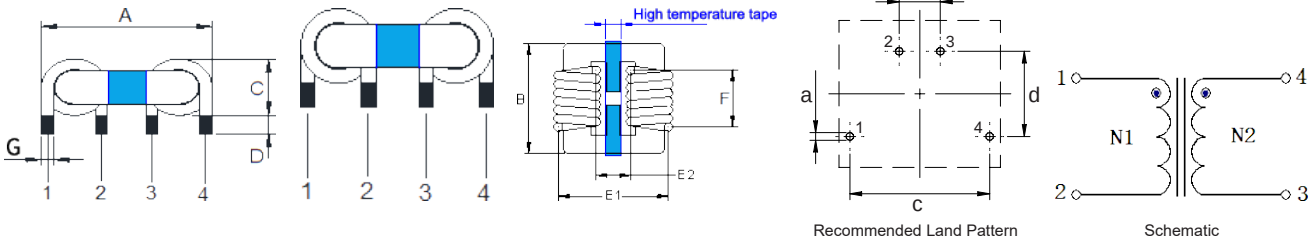

(unit: mm)

Series size	A	B	C	D	E1	E2	F	G	a	b	c	d
LFET2725W-121P	27.5Max	25.0Max	11.7Max	4.5±0.5	24.8±0.5	6.0±0.5	14.5±0.5	Ø2.0±0.1	Φ2.3	6.0	24.8	14.5
LFET2725W-151P	27.5Max	25.0Max	11.3Max	4.5±0.5	24.6±0.5	6.2±0.5	14.5±0.5	Ø1.8±0.1	Φ2.1	6.2	24.6	14.5
LFET2725W-231P	27.5Max	25.0Max	10.4Max	4.5±0.5	24.2±0.5	6.6±0.5	14.5±0.5	Ø1.4±0.1	Φ1.7	6.6	24.2	14.5
LFET2725W-331P	27.5Max	25.0Max	10.0Max	4.5±0.5	24.0±0.5	6.8±0.5	15.0±0.5	Ø1.2±0.1	Φ1.5	6.8	24.0	15.0
LFET2725W-451P	27.5Max	25.0Max	9.7Max	4.5±0.5	23.8±0.5	7.0±0.5	14.5±0.5	Ø1.0±0.1	Φ1.3	7.0	23.8	14.5

Electrical characteristics:

Test condition:at 25℃ 10KHz/0.1V

PART NO.	L(μH)±40%	Irms(A) Max	DCRmax. (mΩ)	VR (V (AC))	VT (V (AC))	Material	Mount	Wurth
LFET2725W-121P	120	23.5	1.4	250	1500	MnZn	THT	7448680200
LFET2725W-151P	150	20	1.9	250	1500	MnZn	THT	7448680180
LFET2725W-231P	230	16	3.6	250	1500	MnZn	THT	7448680140
LFET2725W-331P	330	12	6	250	1500	MnZn	THT	7448680120
LFET2725W-451P	450	9.5	9.6	250	1500	MnZn	THT	7448680100

NOTE:

- All test data is referenced to 25℃ ambient.
- Irms: DC current(A) that will cause an approximate △T of 40℃.
- Isat: DC current(A) that will cause Lo to drop approximate 30%.
- Operating temperature range is -25℃ to 125℃.
- The part temperature(ambient and temp rise) should not exceed 125℃ under worse case operating conditions. Circuit design, component placement, PWB trace size and thickness, airflow and other cooling provision all affect the part temperature. Part temperature should be verified in the end application.

Packing Information:

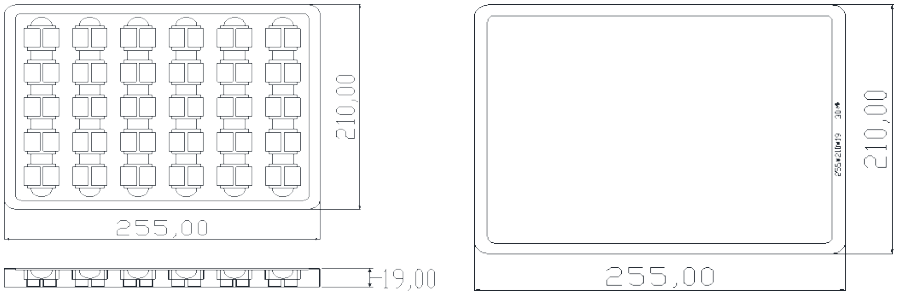

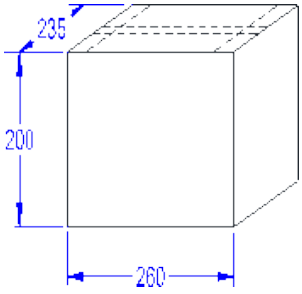

PVC SIZE	QUANTITY
255*210*19mm	30/PVC

OUTBOX SIZE	QUANTITY
260*235*200mm	210PCS / BOX

NOTE:

- The product model, name, quantity, production cycle, factory date, manufacturer's logo and QA factory inspection seal are marked on the packaging box.
- One bundle per carton, 7 layers per bundle, 30pcs per layer. The number of packages per carton is 210PCS.
- The same product with different production cycles shall not be put into the same packing box.

SACM SERIES

FEATURES:

- Chip common mode filter for large current applications. For each series, there is excellent common mode impedance and noise suppression in a compact case.
- Compatible with high-density portable devices, which are always being made smaller and lighter, because the height has beenreduced.
- Operating temperature range: -40 to +85C.

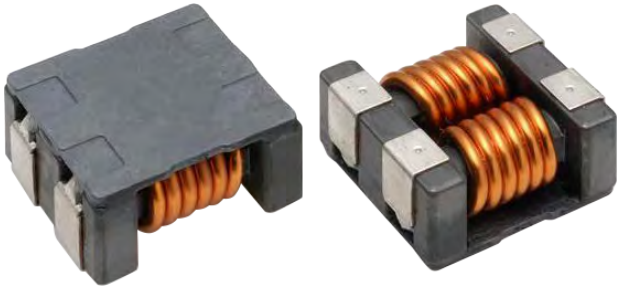

APPLICATION:

- Power line noise countermeasure for various electronic equipment.
- Noise countermeasure for adapter lines and batterv lines or laroer electronic eauipment such as note PCs and word processors.

Explanation of part numbers:

SACM	0706	-	701
Series Codes	Size Codes		Impedance Codes

Boundary dimension:

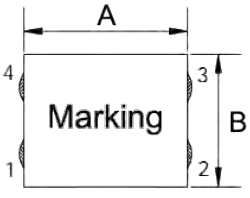

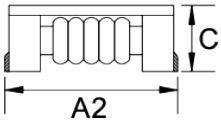

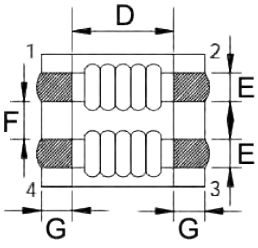

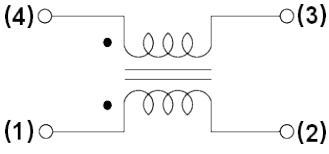

Schematic

(unit: mm)

size / series	A	A2	B	C	D	E	F	G
SACM0402	4.5±0.5	4.8±0.5	4.5±0.5	2.0Max.	2.7Typ.	0.8Typ.	1.25Typ.	1.0Typ.
SACM0706	7.0±0.5	7.5Ref.	6.0±0.5	3.8Max.	3.5Typ.	1.5±0.2	1.5±0.2	1.75±0.2
SACM0907	9.0±0.5	9.5Ref.	7.0±0.5	4.8Max.	5.7Typ.	1.5±0.2	2.0±0.2	1.75±0.2
SACM1211-L	12.0±0.5	12.5±0.5	11.0±0.5	6.0Max.	7.4Typ.	2.7±0.2	2.5±0.2	2.3±0.2
SACM1211	12.0±0.5	12.5±0.5	10.8±0.5	6.4Max.	7.0Typ.	2.7±0.2	2.5±0.2	2.5±0.2
SACM1513-L	13.0±0.5	13.5±0.5	15.0±0.5	6.0Max.	2.7±0.2	2.3±0.2	3.8±0.2	10.4Typ.

Electrical characteristics:

Series	Z(Ω)at 100MHz		DCR (mΩ)Max.	IDC(A)Max.	IR (mΩ)Min.	Rated Volt. (V)Max.
	Min.	Typ.				
SACM0402-231	180	230	45.0	1.8	10	50
SACM0402-301	200	300	45.0	1.8	10	50
SACM0402-401	300	420	50.0	1.5	10	50
SACM0402-701	500	700	59.0	1.4	10	50
SACM0402-901	650	900	68.0	1.3	10	50
SACM0402-102	800	1000	68.0	1.3	10	50
SACM0402-142	1200	1400	81.0	1.2	10	50
SACM0706-101	100	140	10.0	9.0	10	50
SACM0706-301	225	300	10.0	5.0	10	50
SACM0706-501	275	350	10.0	5.0	10	50
SACM0706-601	400	600	15.0	4.0	10	50
SACM0706-701	500	700	15.0	4.0	10	50
SACM0706-102	800	1020	17.0	3.0	10	50
SACM0706-132	910	1300	21.0	2.5	10	50
SACM0907-301	225	300	6.0	6.0	10	50
SACM0907-501	450	600	8.0	5.5	10	50
SACM0907-701	500	700	10.0	5.0	10	50
SACM1211-701-L	500	700	6.0	8.0	10	50
SACM1211-102-L	750	1000	14.0	6.0	10	50
SACM1211-231	80	230	2.0	10.0	10	50
SACM1211-701	500	700	6.0	8.0	10	50
SACM1211-801	600	800	8.0	8.0	10	50
SACM1211-102	750	1000	14.0	6.0	10	50
SACM1211-252	2200	2500	35.0	1.8	10	50
SACM1211-272	2300	2700	50.0	1.5	10	50
SACM1513-551-L	450	550	4.0	10.0	10	50

NOTE:

- All test data is referenced to 25℃ ambient.
- Max Heat Rating DC Current would cause an approximately △T of 40℃ .
- Max Saturation DC Current would cause Lo to drop approximately 30%.
- The Part temperature (ambient + △T) should not exceed 85℃ under worst case operating conditions.
- Circuit design, component placement, PWB trace size and thickness, airflow and other cooling provisions all effect the part temperature. Part temperature should be verified in the end application.

Packing Information:

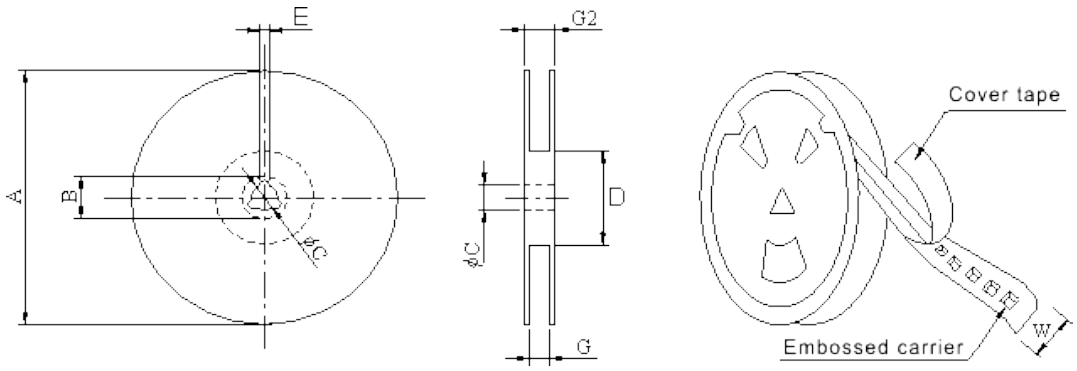

(unit: mm)

Series	Type	A(Ref.)	B(Ref.)	C(Ref.)	D(Ref.)	E(Ref.)	G(Ref.)	G2(Ref.)
SACM0402	178*12	178±1	20±0.8	13±0.5	60±1	2.0±0.5	12.5±0.5	14.5±0.5
SACM0706	330*16	330±1	20±0.8	13±0.5	100±1	2.0±0.5	12.5±0.5	16.5±0.5
SACM0907	330*24	330±1	20±0.8	13±0.5	100±1	2.0±0.5	24.5±0.5	28.5±0.5
SACM1211-L	330*24	330±1	20±0.8	13±0.5	100±1	2.0±0.5	24.5±0.5	28.5±0.5
SACM1211	330*24	330±1	20±0.8	13±0.5	100±1	2.0±0.5	24.5±0.5	28.5±0.5
SACM1513-L	330*24	330±1	20±0.8	13±0.5	100±1	2.0±0.5	24.5±0.5	28.5±0.5

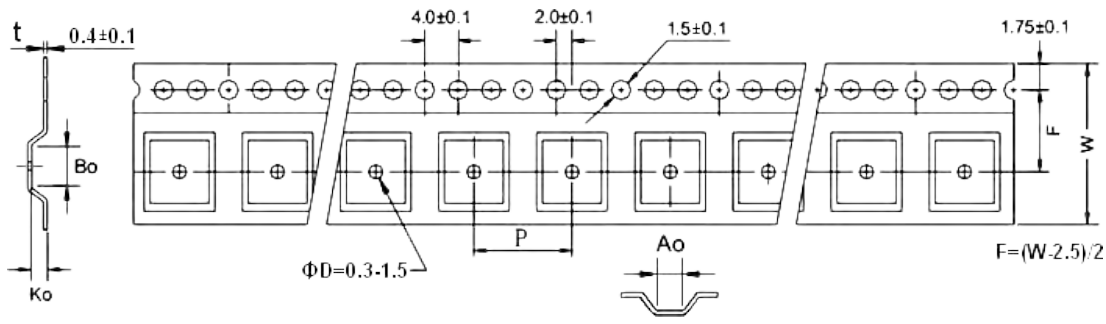

(unit: mm)

Series	QTY (Pcs/Reel)	Ao	Bo	Ko	W	P
SACM0402	1000	5.0	5.5	2.2	12	8
SACM0706	1500	7.0±0.1	8.0±0.1	3.9±0.1	16	10
SACM0907	700	7.5±0.1	10.0±0.1	5.0±0.1	24	16
SACM1211-L	500	13.2±0.1	11.5±0.1	6.5±0.1	24	20
SACM1211	500	13.2±0.1	11.5±0.1	6.5±0.1	24	20
SACM1513-L	500	13.4±0.1	15.5±0.1	7.0±0.1	24	16

Typical Pulling Force: 10-130 grams

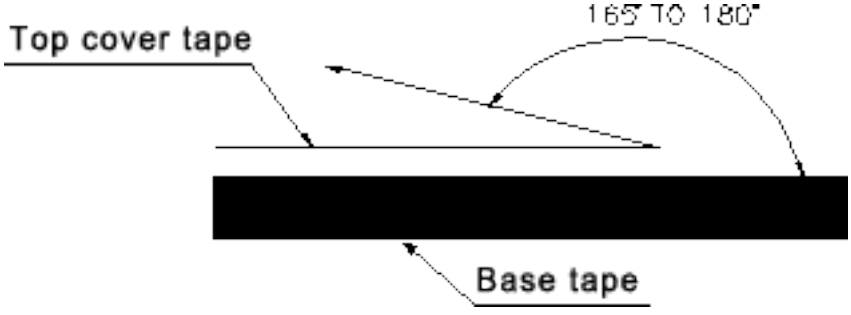

SB SERIES

Product description:

- High current, low loss of iron powder core.
- Low profile for machine placement.
- Minimize electromagnetic interference.
- Prevent EMI effect via precise impedance.
- Custom design available.

Explanation of part numbers:

SB	0555	M	-	6R1	M
Series Codes	Size Codes	Material type		Inductance Codes	Tolerance

Boundary dimension:

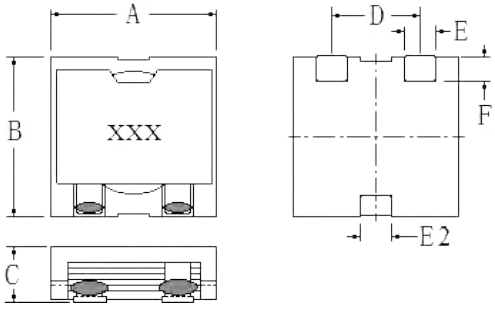

Recommended Land Pattern:

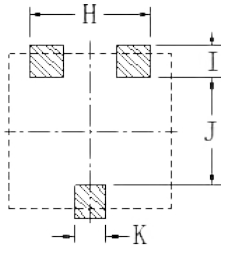

Schematic:

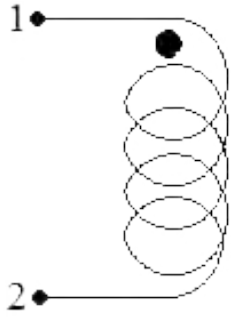

(unit: mm)

Series Name	A	B	C	D	E	E2	F	H	I	J	K
SB0450M	10.4Max	10.6Max	5.5Max	5.5±0.5	2.5Ref	1.5Ref	2.0Ref	8.2Ref	2.5Ref	5.8Ref	2.4Ref
SB0555M	13.1Max	13.5Max	5.8Max	7.0±0.5	2.5Ref	2.5Ref	2.0Ref	9.8Ref	2.5Ref	8.0Ref	3.0Ref
SB0590M	13.1Max	13.5Max	9.0Max	7.0±0.5	2.5Ref	2.5Ref	2.0Ref	9.8Ref	2.5Ref	8.0Ref	3.0Ref
SB5680M	14.9Max	15.4Max	8.2Max	9.0±0.5	2.8Ref	2.5Ref	1.8Ref	13.0Ref	2.7Ref	10.0Ref	3.5Ref
SB5612M	14.9Max	15.4Max	12.2Max	9.0±0.5	2.8Ref	2.5Ref	1.8Ref	13.0Ref	2.7Ref	10.0Ref	3.5Ref
SB6510M	17.3Max	18.8Max		10.9±0.5	2.6±0.3	3.0±0.3	3.0±0.5	15.0Ref	4.5Ref	10.9Ref	4.3Ref
SB7510M	19.9Max	18.5Max		13.1±0.5	2.5±0.3	3.0±0.3	3.0±0.5	17.0Ref	4.5Ref	10.7Ref	4.3Ref

Electrical characteristics:

Test condition:at 25℃ 100KHz/0.1V

PART No.	L(0A)(μH±20%)	Irms(A)Type.	Isat(A)Type.	DCR(mΩ)Type.	DCR(mΩ)Max.	Coilcraft
SB0450M-R80M	0.8	16.3	25.6	4.3	5	SER1052-801ML
SB0450M-1R0M	1	16.3	17.5	4.3	5	SER1052-102ML
SB0450M-1R3M	1.3	16.3	17.2	4.3	5	SER1052-132ML
SB0450M-1R5M	1.5	16.3	14.5	4.3	5	SER1052-152ML
SB0450M-2R2M	2.2	16.3	10	4.3	5	SER1052-222ML
SB0450M-1R2M	1.2	15	21.3	5.9	7	SER1052-122ML
SB0450M-1R8M	1.8	15	14.3	5.9	7	SER1052-182ML
SB0450M-3R2M	3.2	15	8.5	5.9	7	SER1052-322ML
SB0450M-2R5M	2.5	12	12.1	6.4	8.5	SER1052-252ML
SB0450M-4R3M	4.3	12	7	6.4	8.5	SER1052-432ML
SB0450M-2R0M	2	11.5	16.2	8.3	10	SER1052-202ML
SB0450M-4R0M	4	11.5	8.8	8.3	10	SER1052-402ML
SB0450M-5R7M	5.7	11.5	6	8.3	10	SER1052-572ML
SB0555M-R33M	0.33	18	43	0.8	1	SER1360-331KL
SB0555M-R65M	0.65	16	28	2.1	2.5	SER1360-651KL
SB0555M-1R0M	1	13	33.5	2.7	3	SER1360-102KL
SB0555M-1R8M	1.8	13	20	2.7	3	SER1360-182KL
SB0555M-2R7M	2.7	13	14	2.7	3	SER1360-272KL
SB0555M-3R3M	3.3	9.4	14	5.9	6.5	- -
SB0555M-4R0M	4	9.4	13	5.9	6.5	SER1360-402KL
SB0555M-4R7M	4.7	9.4	12	5.9	6.5	SER1360-472KL
SB0555M-6R0M	6	9.4	9.5	5.9	6.5	SER1360-602KL
SB0555M-8R0M	8	7.6	9	9.5	11	SER1360-802KL
SB0555M-100M	10	7.2	7.5	9.5	11	SER1360-103KL
SB0590M-100M	10	9.2	13.16	13.7	15	SER1390-103ML
SB0590M-150M	15	9.2	8.6	13.7	15	SER1390-153ML
SB0590M-220M	22	7.7	7.36	21	23.1	SER1390-223ML
SB0590M-330M	33	7.7	4.76	21	23.1	SER1390-333ML
SB0590M-470M	47	7.7	3.2	21	23.1	SER1390-473ML

NOTE:

- All test data is referenced to 25℃ ambient.
- Irms: DC current(A) that will cause an approximate △T of 40℃.
- Isat: DC current(A) that will cause Lo to drop approximate 30%.
- Operating temperature range is -25℃ to 125℃.
- The part temperature(ambient and temp rise) should not exceed 125℃ under worse case operating conditions. Circuit design, component placement, PWB trace size and thickness, airflow and other cooling provision all affect the part temperature. Part temperature should be verified in the end application.

Electrical characteristics:

Test condition:at 25℃ 100KHz/0.1V

PART No.	L(0A)(μH±20%)	Irms(A)Type.	Isat(A)Type.	DCR(mΩ)Type.	DCR(mΩ)Max.	Sumida
SB5680M-R40N	0.4±30%	23	66	1	1.2	CDEP147NP-0R4NC-95
SB5680M-R90M	0.9	21.5	45	1.2	1.5	CDEP147NP-0R9MC-95
SB5680M-1R5M	1.5	20	34	1.7	2	CDEP147NP-1R5MC-95
SB5680M-2R4M	2.4	17.5	28	2.7	3.2	CDEP147NP-2R4MC-95
SB5680M-3R4M	3.4	16	23	4.1	5	CDEP147NP-3R4MC-95
SB5680M-4R7M	4.7	12.5	19	5	6	CDEP147NP-4R7MC-95
SB5680M-6R1M	6.1	11	18.5	6.5	7.8	CDEP147NP-6R1MC-95
SB5680M-7R7M	7.7	10	15.5	8.2	9.9	CDEP147NP-7R7MC-95
SB5680M-9R5M	9.5	8.5	14	11.1	13.3	CDEP147NP-9R5MC-95
SB5680M-100M	10	10	11.5	8.2	9.9	CDEP147NP-100MC-125
SB5680M-120M	12	8.5	10	11.1	13.3	CDEP147NP-120MC-125
SB5680M-470M	47	2.5	3	22.3	27	- -
SB5612M-4R7M	4.7	13	18.4	3.7	4.5	CDEP1411NP-4R7MC-95
SB5612M-6R1M	6.1	12.5	16.4	4.5	5.4	CDEP1411NP-6R1MC-95
SB5612M-7R7M	7.7	10.3	14.8	6.3	7.6	CDEP1411NP-7R7MC-95
SB5612M-100M	10	9.6	13.1	7	8.4	CDEP1411NP-100MC-95
SB5612M-120M	12	9	11.8	8.7	9.8	CDEP1411NP-120MC-95
SB5612M-140M	14	8.3	10.9	9.4	11.3	CDEP1411NP-140MC-95
SB5612M-220ML	22	8.3	6.4	9.4	11.3	CDEP1411NP-220MC-150
SB5612M-150M	15	8	9.5	9.5	11.4	- -
SB5612M-220M	22	7	8	11	13.2	- -
SB5612M-330M	33	6	6.5	17	20.4	- -
SB5612M-470M	47	3.5	5	25	30	- -

Electrical characteristics:

Test condition:at 25℃ 100KHz/0.1V

PART No.	C (mm) Height Max	L(0A)(μH±20%)	Irms(A)Type.	Isat(A)Type.	DCR(mΩ)Type.	DCR(mΩ)Max.
SB6580M-1R0M	8.0	1	36	34	1.05	1.15
SB6585M-1R5M	8.7	1.5	30	37	1.5	1.6
SB6595M-2R2M	9.6	2.2	26.8	34	1.95	2.1
SB6510M-3R3M	10.3	3.3	25	28	2.4	2.6
SB6510M-4R7M	10.3	4.7	25	18.6	2.4	2.6
SB6585M-6R8M	8.7	6.8	14.4	15.5	6.35	6.8
SB6585M-100M	8.7	10	13	12.2	7.35	7.9
SB6595M-150M	9.6	15	11.7	12.6	10.35	11.1
SB6510M-200M	10.3	20	10	11.3	12.35	13.25
SB6511M-300M	11.3	30	8.5	9.2	15.35	16.5
SB7580M-1R0M	8.0	1	36.3	46.6	0.95	1.09
SB7590M-1R5M	9.0	1.5	30.2	48.1	1.35	1.55
SB7595M-2R2M	9.6	2.2	27.2	43.6	1.8	2.07
SB7510M-3R3M	10.6	3.3	25.1	35.1	2.25	2.59
SB7510M-4R7M	10.6	4.7	25.1	25.5	2.25	2.59
SB7580M-6R8M	8.0	6.8	12.7	21.3	7.6	8.74
SB7580M-100M	8.0	10	11.7	15.8	8.8	10.12
SB7590M-150M	9.0	15	10.7	14.7	11	12.65
SB7595M-200M	9.6	20	9.5	13.5	13.5	15.53
SB7510M-300M	10.6	30	8.6	11.5	17	19.55

Packing Information:

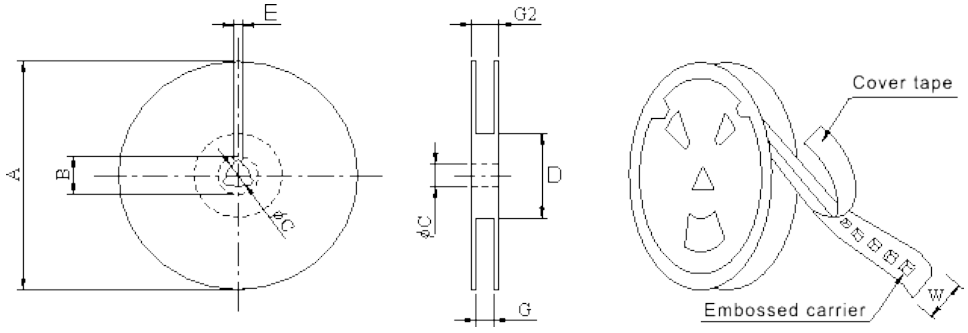

(unit: mm)

Series	TYPE	A(Ref.)	B(Ref.)	C(Ref.)	D(Ref.)	E(Ref.)	G(Ref.)	G2(Ref.)
SB0450M	13"*24mm	330±1	20±0.8	13±0.5	100±1	2.0±0.5	24.5±0.5	29±0.5
SB0555M	13"*24mm	330±1	20±0.8	13±0.5	100±1	2.0±0.5	24.5±0.5	29±0.5
SB0590M	13"*24mm	330±1	20±0.8	13±0.5	100±1	2.0±0.5	24.5±0.5	29±0.5
SB5680M	13"*24mm	330±1	20±0.8	13±0.5	100±1	2.0±0.5	24.5±0.5	29±0.5
SB5612M	13"*24mm	330±1	20±0.8	13±0.5	100±1	2.0±0.5	24.5±0.5	29±0.5
SB6510M	13"*32mm	330±1	20±0.8	13±0.5	100±1	2.0±0.5	32.5	36.5
SB7510M	13"*32.4mm	330±1	20±0.8	13±0.5	100±1	2.0±0.5	32.9	36.9

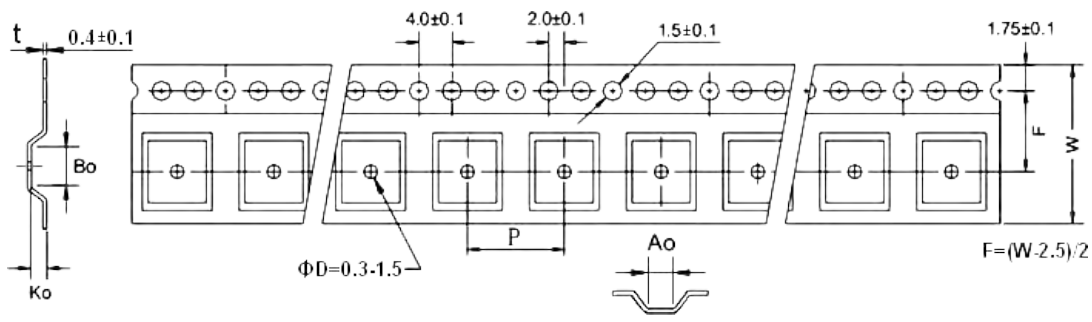

(unit: mm)

Series	QTY (Pcs/Reel)	Ao	Bo	Ko	W	P
SB0450M	700 Ref.	11.0	10.8	5.6	24	16
SB0555M	500 Ref.	13.8	13.5	5.8	24	16
SB0590M	300 Ref.	13.8	13.5	9.2	24	20
SB5680M	350 Ref.	15.4	15.6	8.2	24	20
SB5612M	250 Ref.	15.4	15.6	12.2	24	20
SB6580M	200 Ref.	19.0	17.5	10.5	32	28
SB6585M	200 Ref.	19.0	17.5	10.5	32	28
SB6595M	200 Ref.	19.0	17.5	10.5	32	28
SB6510M	200 Ref.	19.0	17.5	10.5	32	28
SB6511M	180 Ref.	19.0	17.5	11.5	32	28
SB7580M	200 Ref.	19.0	20.4	9.8	32	28
SB7590M	200 Ref.	19.0	20.4	9.8	32	28
SB7595M	200 Ref.	19.0	20.4	9.8	32	28
SB7510M	180 Ref.	19.0	20.4	10.8	32	28

Typical Pulling Force: 10~130grams

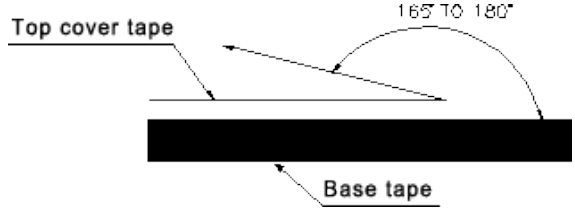

SER2014 SERIES

Product description:

- Assemblage design,sturdy structure.
- High inductance, high current, low magnetic loss, low ERS, small parasitic capacitance.
- Flat wire winding, achieve a low DCR.
- Temperature rise current and saturation current is less influenced by environment.
- Operating temperature: -25℃ ~125℃ .
- Placement form is SMD.

Explanation of part numbers:

SER	2014	T	-	8R6	M	C*1
Series Codes	Size Codes	Pin No. 3		Inductance Codes	Tolerance	Coating

*1:Customers can order coated products for magnetic cores

Boundary dimension:

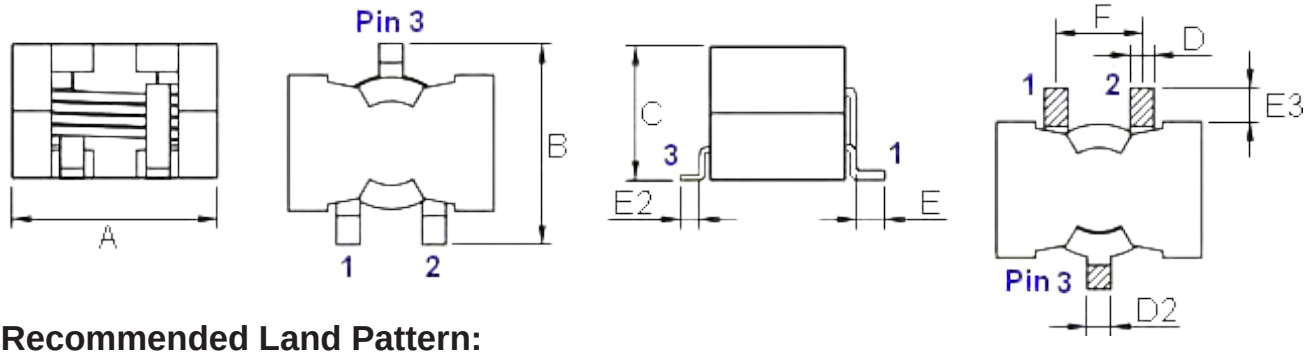

Recommended Land Pattern:

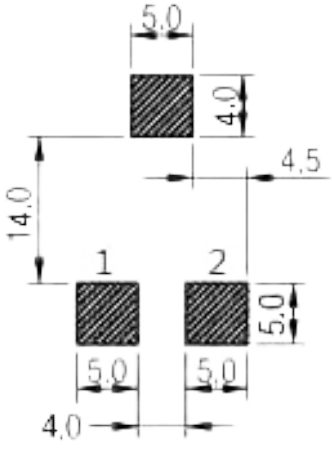

(unit: mm)

Series \ Size	A	B	C	D	D2
SER2014T	21.8 Max	21.5-22.5Max	14.5 Max	2.5±0.2	2.5 Ref.

Series \ Size	E	E2	E3	F
SER2014T	3.0±1.0	2.0 Ref.	3.5-7.0	9.0±0.5

Electrical characteristics:

Test condition:at 25℃ 100KHz/0.1V

Part No.	Lo(0A) (μH)±20%	Irms(A) Type.	Isat(A) Type.	DCR(mΩ) Type.	DCR(mΩ) Max.	Material	Size B (mm)	DCR SPEC.	Wurth
SER2014T-R70M	0.7	32	75	0.86	0.95	MnZn	22.5	Confirmed	7443630070
SER2014T-1R4M	1.4	31.5	60	1.08	1.2	MnZn	22.5	Confirmed	7443630140
SER2014T-2R2M	2.2	28	52	1.5	1.65	MnZn	22.5	Confirmed	7443630220
SER2014T-3R1M	3.1	26	45	2.09	2.3	MnZn	22.5	Confirmed	7443630310
SER2014T-3R3M	3.3	26	40	2.09	2.3	MnZn	22.5	Confirmed	- -
SER2014T-4R2M	4.2	24	38	3.04	3.35	MnZn	22.5	Confirmed	7443630420
SER2014T-4R7M	4.7	24	32	3.04	3.35	MnZn	22.5	Confirmed	- -
SER2014T-5R5M	5.5	22	33	4	4.4	MnZn	22.5	Confirmed	7443630550
SER2014T-6R8M	6.8	21	30	5.65	6.2	MnZn	21.5	Confirmed	- -
SER2014T-7R0M	7	21	30	5.65	6.2	MnZn	21.5	Confirmed	7443630700
SER2014T-8R6M	8.6	17	25	7.2	7.95	MnZn	21.5	Confirmed	7443630860
SER2014T-100M	10	16	23	7.95	8.75	MnZn	21.5	Confirmed	7443631000
SER2014T-150M	15	14	21	8.7	9.6	MnZn	21.5	Confirmed	7443631500
SER2014T-220M	22	12.5	15	10.65	11.75	MnZn	21.5	Confirmed	7443632200
SER2014T-330M	33	12	11	11.4	12.6	MnZn	21.5	Confirmed	7443633300
SER2014T-470M	47	11	8.5	12.2	13.5	MnZn	21.5	Confirmed	7443634700

NOTE:

- All test data is referenced to 25℃ ambient.
- Irms: DC current(A) that will cause an approximate △T of 40℃.
- Isat: DC current(A) that will cause Lo to drop approximate 30%.
- Operating temperature range is -25℃ to 125℃.
- The part temperature(ambient and temp rise) should not exceed 125℃ under worse case operating conditions. Circuit design, component placement, PWB trace size and thickness, airflow and other cooling provision all affect the part temperature. Part temperature should be verified in the end application.
- *P/N* is customer customized specifications.
- Rights of changing product's design and specification are reserved, without prior notice.

Packing Information:

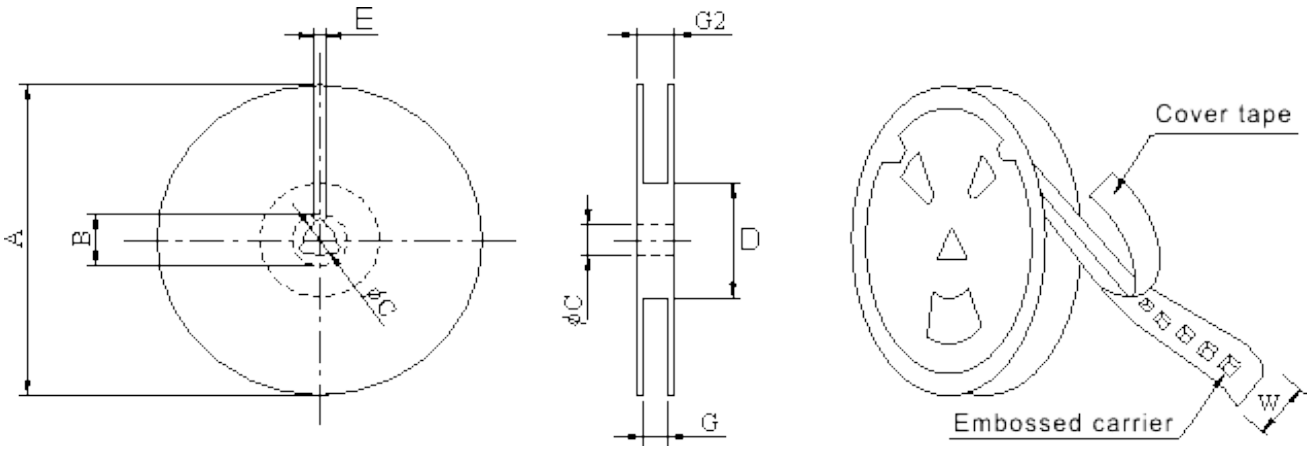

(unit: mm)

TYPE	A(Ref.)	B(Ref.)	C(Ref.)	D(Ref.)	E(Ref.)	G(Ref.)	G2(Ref.)
330*44mm	330±1	20±0.8	13±0.5	100±1	2.0±0.5	44.5±0.5	49±0.5

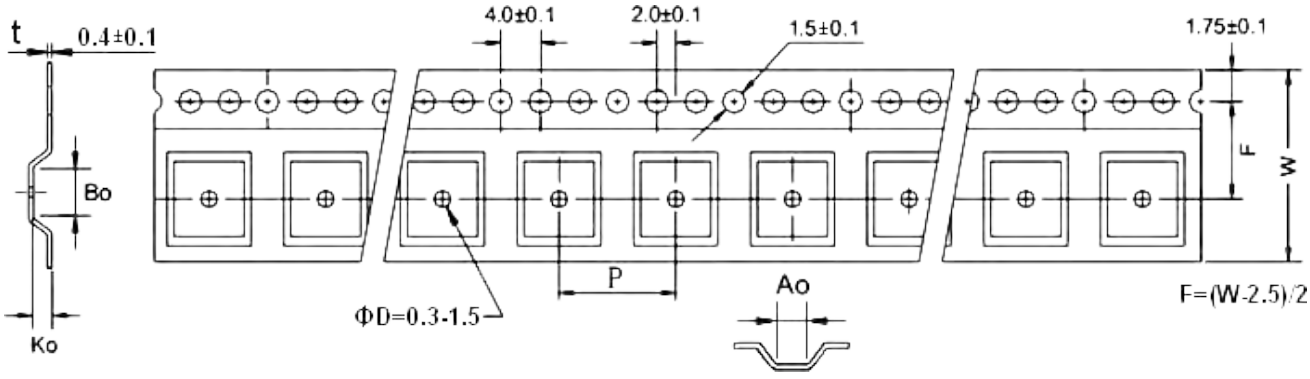

(unit: mm)

Series	QTY (Pcs/Reel)	Ao	Bo	Ko	W	P
SER2014	120 Ref.	24.5	21.5	17.5	44	32

Typical Pulling Force: 10~130grams

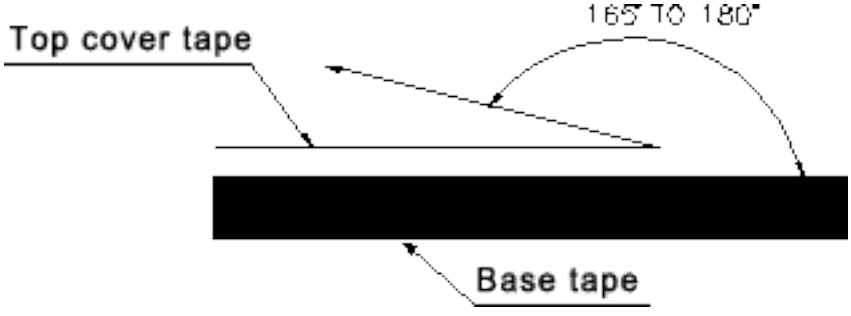

SER2800 2900 SERIES

Product description:

- Perfect for high current.
- Extremely low DCR.
- Low voltage power supply applications.
- High power DC power supply.
- Operating temperature: -25℃ ~125℃ .
- Placement form is SMD.

Explanation of part numbers:

SER	2918	H	T	-	3R3	M
Series Codes	Size Codes	DCR Type	Pins Type		Inductance Codes	Tolerance

Boundary dimension:

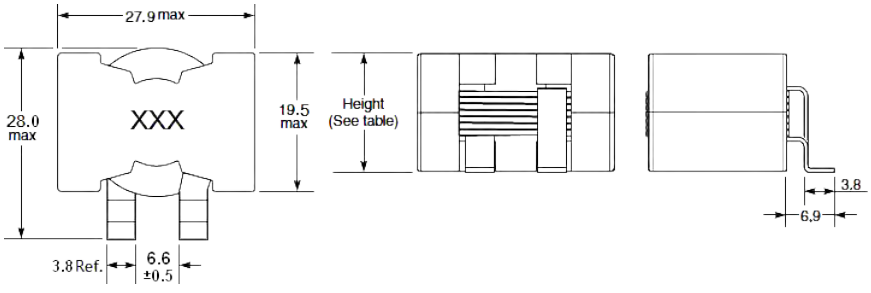

Recommended Land Pattern:

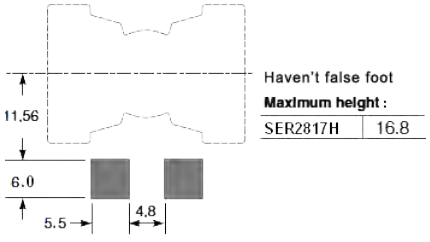

Electrical characteristics:

Test condition:at 25℃ 100KHz/0.1V

PART NO.	L(0A)(μH)	DCR(mΩ)		SRF(MHz)TYPE	Isat(A)		Irms(A) 40℃ rise	Coilcraft
		Nom.	Max.		20% drop	30% drop		
SER2817H-3R3M	3.3±20%	2.45	2.8	40	92.5	93.6	28	SER2817H-332KL
SER2817H-4R7M	4.7±20%	2.45	2.8	30	61.2	62.4	28	SER2817H-472KL
SER2817H-6R8M	6.8±20%	2.45	2.8	25	45	45.9	28	SER2817H-682KL
SER2817H-100M	10±20%	2.45	2.8	20	31.2	32.1	28	SER2817H-103KL
SER2817H-150M	15±20%	2.45	2.8	16	21.2	21.9	28	SER2817H-153KL
SER2817H-220M	22±20%	2.45	2.8	15	14	15	28	SER2817H-223KL
SER2817H-330M	33±20%	2.45	2.8	10	8.7	9.6	28	SER2817H-333KL

Boundary dimension:

Recommended Land Pattern:

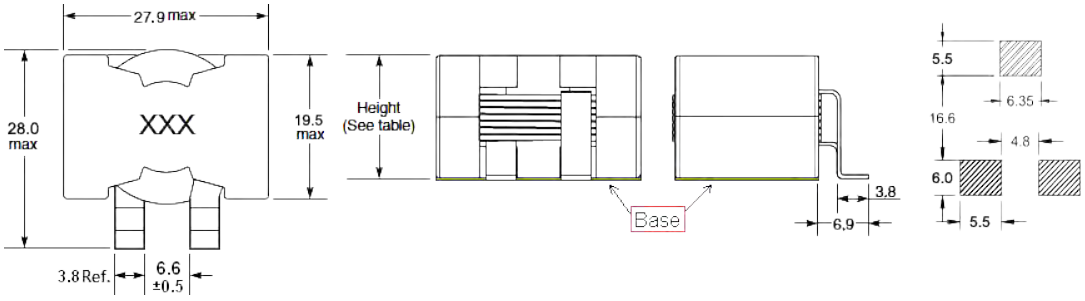

Maximum height :	
SER2915H	15.5

Electrical characteristics:

Test condition:at 25℃ 100KHz/0.1V

PART NO.	L(0A)(μH)	DCR(mΩ)		SRF(MHz)TYPE	Isat(A)		Irms(A) 40°C rise	Coilcraft
		Nom.	Max.		20% drop	30% drop		
SER2915H-1R5M	1.5±20%	1.58	1.8	50	>100	>100	30	- -
SER2915H-2R2M	2.2±20%	1.58	1.8	40	>100	>100	30	SER2915H-222KL
SER2915H-3R3M	3.3±20%	1.58	1.8	30	66.9	68.4	30	SER2915H-332KL
SER2915H-4R7M	4.7±20%	1.58	1.8	25	48	50.1	30	SER2915H-472KL
SER2915H-6R8M	6.8±20%	1.58	1.8	20	34.5	36.2	30	SER2915H-682KL
SER2915H-100M	10±20%	1.58	1.8	15	21.5	23.4	30	SER2915H-103KL

Boundary dimension:

Recommended Land Pattern:

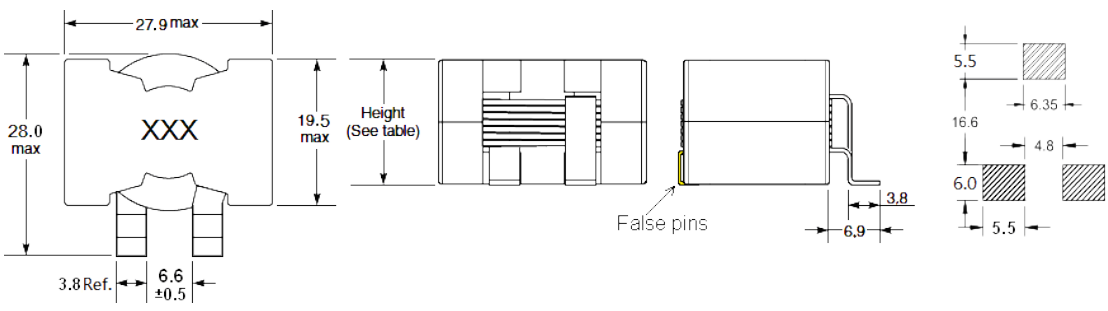

Maximum height :	
SER2915HT	15.5

Electrical characteristics:

Test condition:at 25℃ 100KHz/0.1V

PART NO.	L(0A)(μH)	DCR(mΩ)		SRF(MHz)TYPE	Isat(A)		Irms(A) 40°C rise	Coilcraft
		Nom.	Max.		20% drop	30% drop		
SER2915HT-1R5M	1.5±20%	1.58	1.8	50	>100	>100	30	- -
SER2915HT-2R2M	2.2±20%	1.58	1.8	40	>100	>100	30	- -
SER2915HT-3R3M	3.3±20%	1.58	1.8	30	66.9	68.4	30	- -
SER2915HT-4R7M	4.7±20%	1.58	1.8	25	48	50.1	30	- -
SER2915HT-6R8M	6.8±20%	1.58	1.8	20	34.5	36.2	30	- -
SER2915HT-100M	10±20%	1.58	1.8	15	21.5	23.4	30	- -

Boundary dimension:

Recommended Land Pattern:

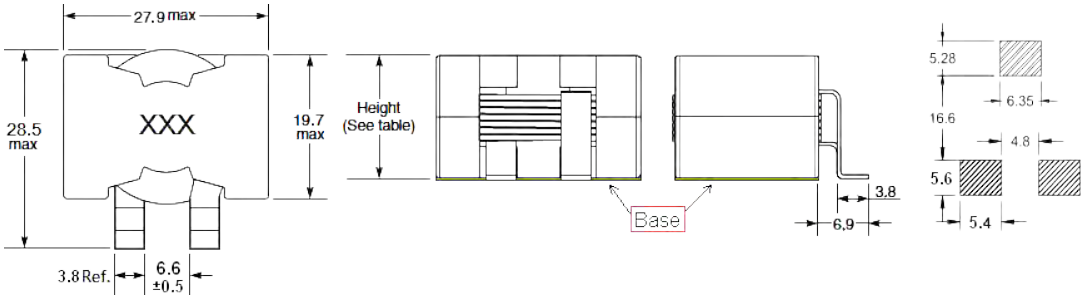

Maximum height :

SER2918H	18.5

Electrical characteristics:

Test condition:at 25℃ 100KHz/0.1V

PART NO.	L(0A)(μH)	DCR(mΩ)		SRF(MHz)TYPE	Isat(A)		Irms(A) 40°C rise	Coilcraft
		Nom.	Max.		20% drop	30% drop		
SER2918H-3R3M	3.3±20%	2.45	2.8	40	92.5	93.6	28	SER2918H-332KL
SER2918H-4R7M	4.7±20%	2.45	2.8	30	61.2	62.4	28	SER2918H-472KL
SER2918H-6R8M	6.8±20%	2.45	2.8	25	45	45.9	28	SER2918H-682KL
SER2918H-100M	10±20%	2.45	2.8	20	31.2	32.1	28	SER2918H-103KL
SER2918H-150M	15±20%	2.45	2.8	16	21.2	21.9	28	SER2918H-153KL
SER2918H-220M	22±20%	2.45	2.8	15	14	15	28	SER2918H-223KL
SER2918H-330M	33±20%	2.45	2.8	10	8.7	9.6	28	SER2918H-333KL

Boundary dimension:

Recommended Land Pattern:

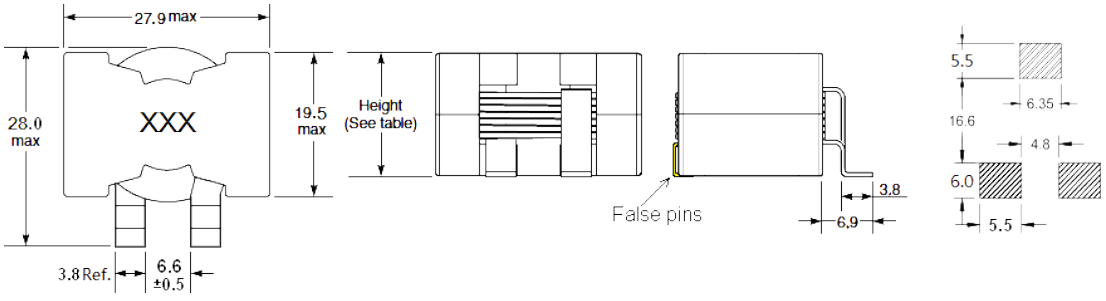

Maximum height :

SER2918HT	17.8

Electrical characteristics:

Test condition:at 25℃ 100KHz/0.1V

PART NO.	L(0A)(μH)	DCR(mΩ)		SRF(MHz)TYPE	Isat(A)		Irms(A) 40°C rise	Coilcraft
		Nom.	Max.		20% drop	30% drop		
SER2918HT-3R3M	3.3±20%	2.45	2.8	40	92.5	93.6	28	- -
SER2918HT-4R7M	4.7±20%	2.45	2.8	30	61.2	62.4	28	- -
SER2918HT-6R8M	6.8±20%	2.45	2.8	25	45	45.9	28	- -
SER2918HT-100M	10±20%	2.45	2.8	20	31.2	32.1	28	- -
SER2918HT-150M	15±20%	2.45	2.8	16	21.2	21.9	28	- -
SER2918HT-220M	22±20%	2.45	2.8	15	14	15	28	- -
SER2918HT-330M	33±20%	2.45	2.8	10	8.7	9.6	28	- -

Packing Information:

1.PET plate specification: 322*202*24mm
35pcs/PET Box

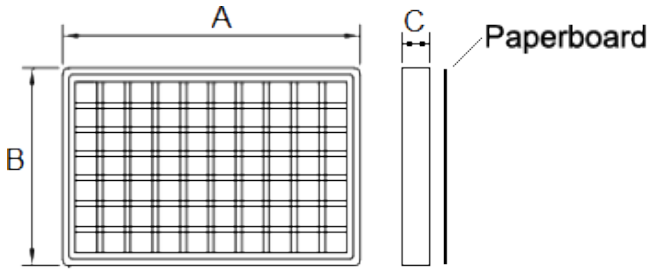

2.Outer box specification: 340*215*220mm,8 PET plate in one box

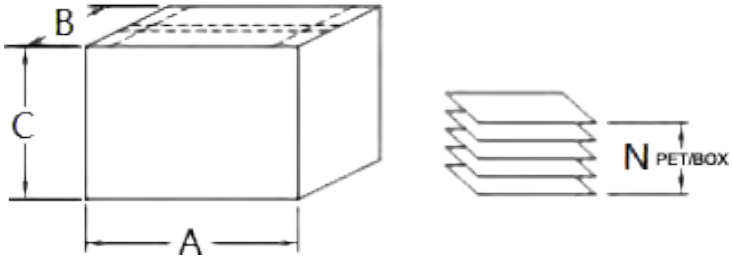

Series Name and Note	Plastic Plate(mm)	Outer Box(mm)
SER2817H(无假脚)	35pcs/PET Box	280pcs/Box
SER2915H(带底板)	35pcs/PET Box	280pcs/Box
SER2915HT(带假脚)	35pcs/PET Box	280pcs/Box
SER2918H(带底板)	35pcs/PET Box	280pcs/Box
SER2918HT(带假脚)	35pcs/PET Box	280pcs/Box

ST SERIES

Characteristics:

- Inductance Range: 1.0uH to 50.0uH
- Current Rating: up to 70Apk
- Footprint: 21.7mm x 21.5mm Max
- Height: 10.6 / 12.5mm Max
- No Thermal Aging

Explanation of part numbers:

ST	2110	M	-	1R0	M
Series Codes	Size Codes	Material type		Inductance Codes	Tolerance

Boundary dimension:

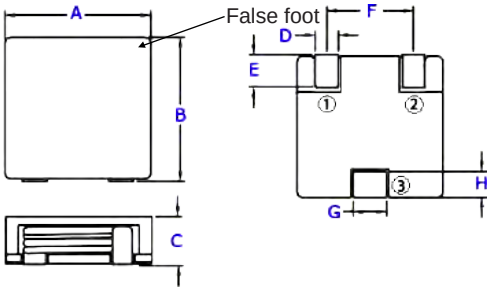

Schematic:

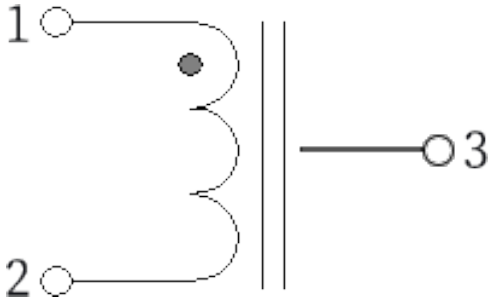

Recommended Land Pattern:

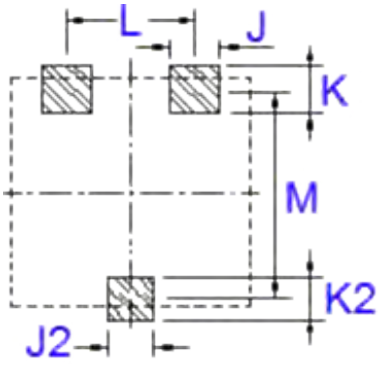

(unit: mm)

Series \ Size	J	K	J2	K2	L	M
ST2110M	4.0 Ref.	5.0 Ref.	4.0 Ref.	4.0 Ref.	14.5 Ref.	17.5 Ref.
ST2110M-4R7M	4.0 Ref.	5.0 Ref.	4.0 Ref.	4.0 Ref.	14.5 Ref.	17.5 Ref.
ST2112M	4.0 Ref.	5.0 Ref.	4.0 Ref.	4.0 Ref.	14.5 Ref.	17.5 Ref.

(unit: mm)

Series \ Size	A	B	C	D	E	F	G	H
ST2110M	21.7Max	21.5Max	10.6Max	3.0±0.3	2.3Min	14.5±0.5	2.5Ref.	2.4Ref.
ST2110M-4R7M	21.7Max	21.5Max	11.5Max	3.0±0.3	2.3Min	14.5±0.5	2.5Ref.	2.4Ref.
ST2112M	21.7Max	21.5Max	12.5Max	3.0±0.3	2.3Min	14.5±0.5	2.5Ref.	2.4Ref.

Electrical characteristics:

Test condition:at 25℃ 100KHz/0.1V

MCT Part Number	Controlled Electrical Specs.		Irated(A)	Heating Current Idc (A TYP)	Saturation Current Isat (A TYP)25°C	Pulse Part Number
	Inductance@ 0Adc(μH ±20%)	DCR(mΩ)Max				
ST2110M-1R0M	1	1.4	40	40	70	PG1083.102NL
ST2110M-1R5M	1.5	1.4	40	40	52	PG1083.152NL
ST2110M-2R2M	2.2	1.8	34	34	46	PG1083.222NL
ST2110M-3R3M	3.3	2.2	28	28	37	PG1083.332NL
ST2110M-4R7M	4.7	2.8	26	26	30	PG1083.472NL
ST2112M-6R8M	6.8	3.8	22	22	26	PG1083.682NL
ST2112M-100M	10.5	6	17.5	17.5	22.5	PG1083.103NL
ST2112M-150M	15.2	9.2	14	14	18.5	PG1083.153NL
ST2112M-240M	24.5	15	11	11	14.5	PG1083.253NL
ST2112M-320M	32	21.5	9	9	12.5	PG1083.323NL
ST2112M-500M	50	32.6	7.4	7.4	10	PG1083.503NL

NOTE:

- All test Data is referenced to 25℃ ambient.
- Typical Heat Rating DC Current would cause an approximately △T of 40℃ .
- Typical Saturation DC Current would cause Lo to drop approximately 30%.
- The Part temperature (ambient + △T) should not exceed 125℃ under worst case operating conditions.Circuit design, component placement, PWB trace size and thickness, airflow and other cooling provisions all effect the part temperature. Part temperature should be verified in the end application.

Packing Information:

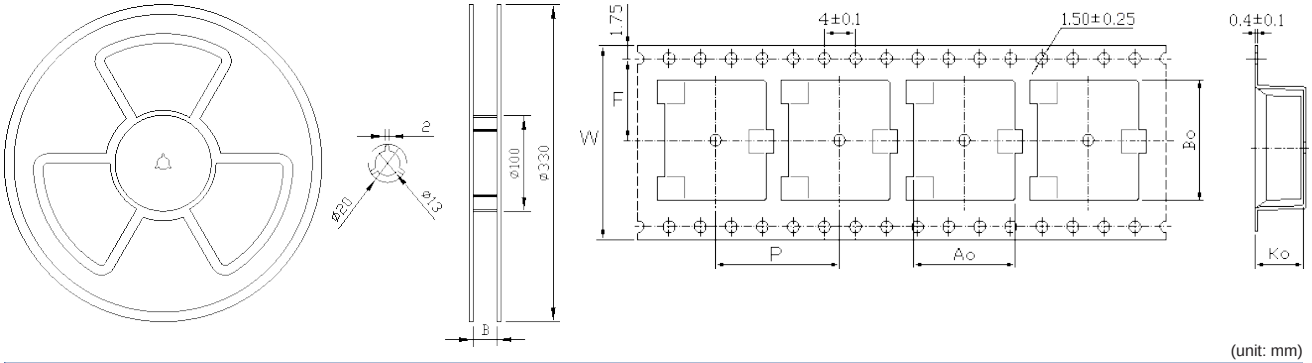

(unit: mm)

Series	A	B	Ao	Bo	Ko	W	P
ST2110M	120(Pcs/Reel)	44.5+0.5/-0	20.8 ± 0.2	21.8 ± 0.2	12.7 ± 0.2	44	32
ST2112M	120(Pcs/Reel)	44.5+0.5/-0	20.8 ± 0.2	21.8 ± 0.2	12.7 ± 0.2	44	32

Typical Pulling Force: 30~130grams

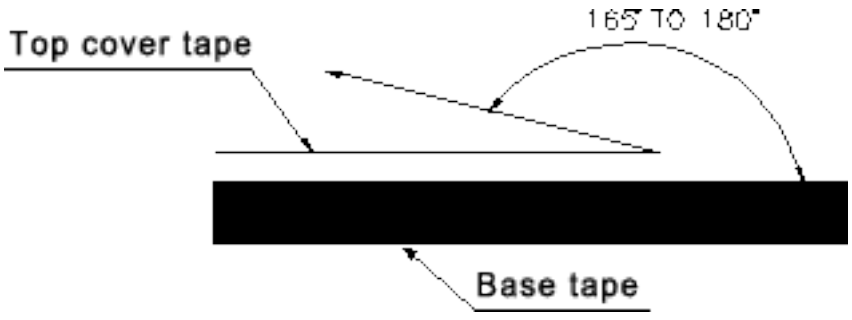

DESCRIPTION	PQ3230(6+6P)-400uH±5%

SPECIFICATION FOR APPROVAL

1.DIMENSION(UNIT:m):

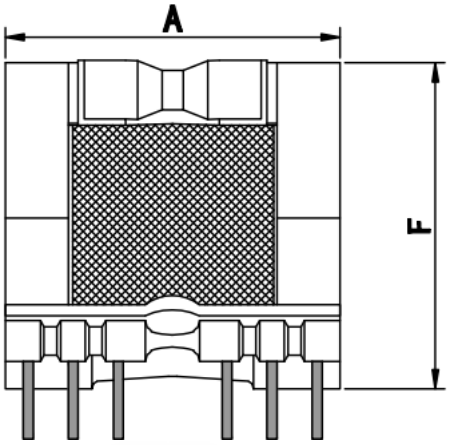

(frontage)

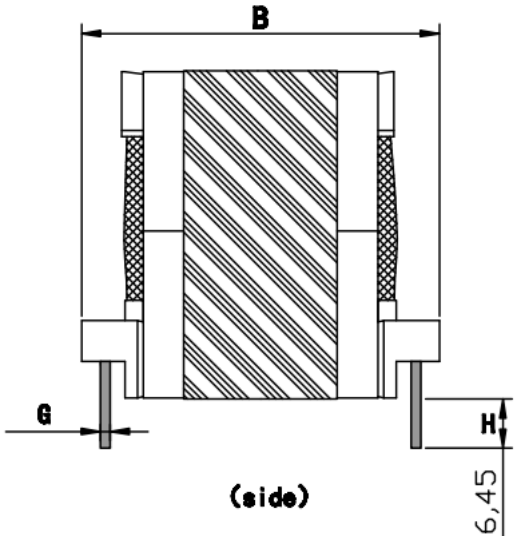

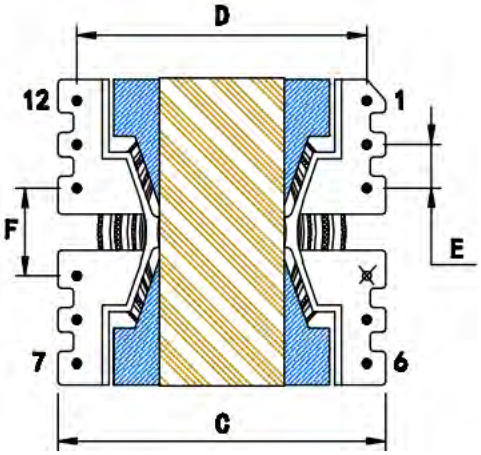

(Bottom View)

NOTE: Pin4 CUT OFF;PIN 2 CUT OFF 1/2

A:33.0 ±1.0	B:34.2 ±0.5	C:34.0 ±1.0	D:30.5 ±0.5
E:5.0 ±0.2	F:7.50 ±0.3	G:0.80 ±0.05	H:5.5 ±1.0

SPECIFICATION FOR APPROVAL

2. PIN CONNECTION:

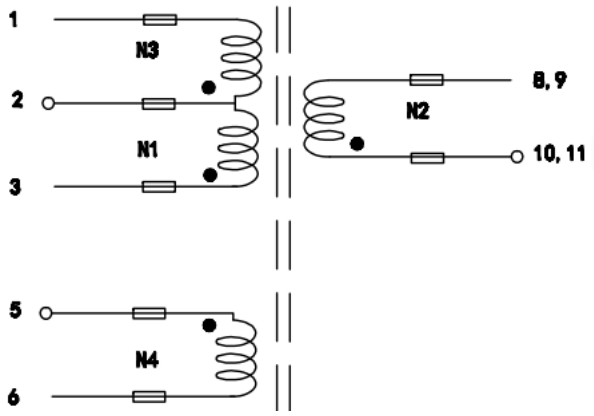

* The“ ●” mrke are ctart point.(c.c.w
c Tube

3.INTERNAL CONSTRUCTION:

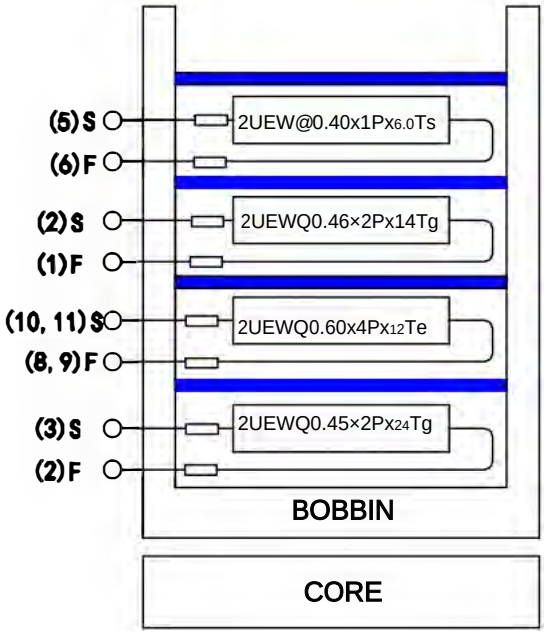

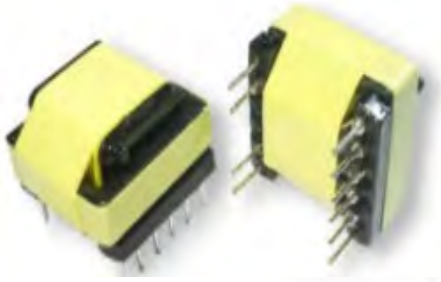

DESCRIPTION	EE16(5+5P)H-1.73mH±10%

SPECIFICATION FOR APPROVAL

1.DIMENSION(UNIT:mm):

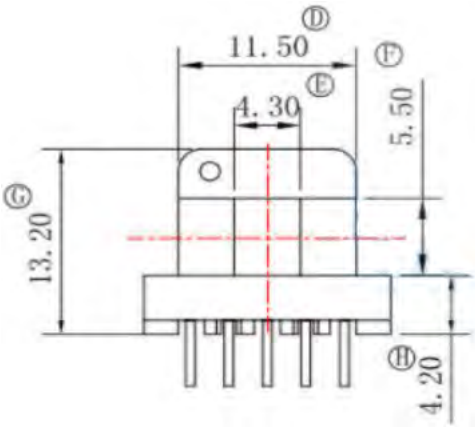

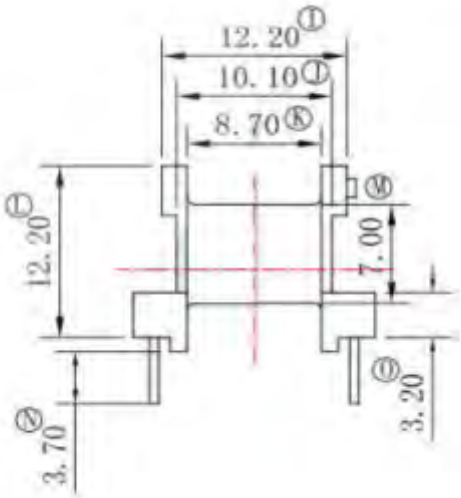

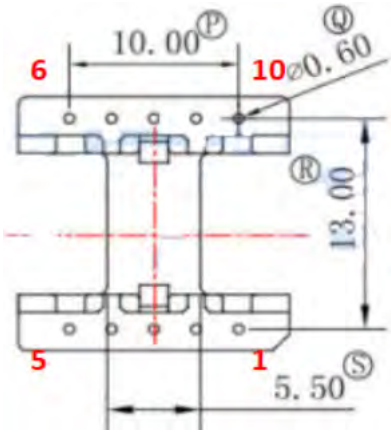

NOTE :PIN2,4,8 CUT OFF

SPECIFICATION FOR APPROVAL

2. PIN CONNECTION(BOTTOM VIER):

* The“ ●” mrke are ctart point.(c.c.w

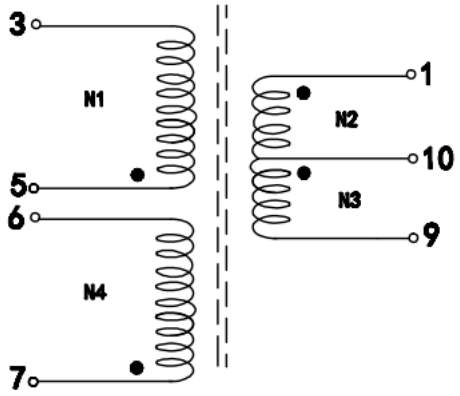

(3chematic diagram)
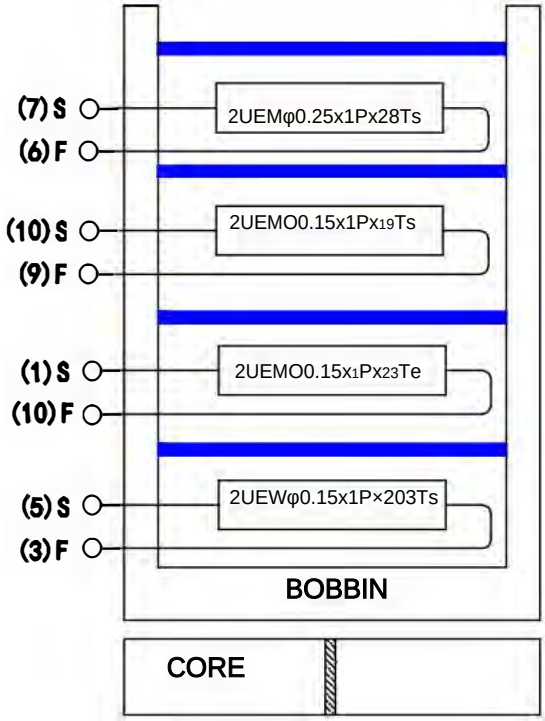
3.INTERNAL CONSTRUCTION: